INDEECO

Phone: (403) 259-3303
www.zirco.ca

INSTRU LI" Series

WARNING

When using electrical appliances, basic precautions should always be taken to reduce the risk of fire, electrical shock and injury, including the following.

Read carefully these instructions before installation, operation of the heater. Failure to adhere to the instructions could result in fire, electric shock, serious personal injury, and death or property damage. Review frequently for continuing safe operation and instruction of future users, if necessary.

IMPORTANT INSTRUCTIONS

1- Read all instructions before installing or using this heater.
2- This heater is hot when in use. To avoid burns, do not let bare skin touch hot surfaces. Keep combustible materials, like furniture, pillows, bedding, papers, clothes, and curtains at least 36 in. (915 mm) from the front of the heater and away from the sides.
3- Extreme caution is necessary when any heater is used by or near children or invalids and whenever the heater is left operating and unattended.
4- Do not operate any heater after it malfunctions. Disconnect power at service panel and have heater inspected by a reputable electrician before reusing.
5- Do not use outdoors.
6- Do not insert or allow foreign objects to enter any ventilation or exhaust opening as this may cause an electric shock or fire, or damage the heater.
7- Do not block air intakes or exhaust in any way whatsoever.
8- This heater has hot and arcing or sparking parts inside. Do not use it in areas where gasoline, paint, or flammable liquids are used or stored.
9- Use this heater only as described in this manual. Any other use not recommended by the manufacturer may cause fire, electric shock, or injury.
10- This heater includes a visual alarm to warn that parts of the heater are getting excessively hot. If the light turns on, immediately turn the heater off and inspect for any objects on or adjacent to the heater that may have blocked the airflow or otherwise caused high temperatures to have occured. If no obstruction is visible, the heater must be checked by a qualified person.
DO NOT OPERATE THE HEATER WHEN THE ALARM LIGHT IS ON.
11- The thermostat should not be considered an infallible device in cases where maintaining a temperature is considered critical. Examples: Hazardous material storage, computer server room, etc. In these particular cases, it is imperative to add a monitoring system to avoid the consequences of a thermostat failure.
12- This unit has a specially designed motor for ceiling installation.

SAVE THESE INSTRUCTIONS

INSTALLATION INSTRUCTIONS

RECESS MOUNTING:

1- The minimum installation height is:
Canada: 8 ft. (2.44 m)
United States: 6 ft. (1.83 m)
2- Provide an opening as shown on drawing, a minimum of 3 in. (76 mm) deep.
3- Remove the appropriate knock-out from the recess box for the electrical supply. The heater junction box volume is 35 in.^{3} (576 cm^3).
4- Install the heater or the recess box and be sure that the heater is attached firmly with the provided screws. Make sure that the edge on each side of the recess box lean on the gypsum panel and not on the structural parts of the ceiling. See marking on the sides of the recess box. **IMPORTANT:** If the recess box is pre-installed, insert the keyholes of the venturi on the 4 screws of the recess box and thighten the 4 screws to prevent vibration.
5- Connect the heater leads to the supply leads according to the wiring diagram of these instructions in accordance with local and national codes.
6- Install the grille using the provided screws. Make sure that the fan blade is free to rotate and the heater assembly is free of foreign objects and/or matter. Make sure that the solid panel of the grille covers the supply connection box.
7- Test heater by temporaly adjusting the thermostat at maximum temperature.

SURFACE MOUNTING:

1- Locate the power supply leads behind the surface box.
2- Mount the surface box securely to the wall with the provided screws.
3- Follow instructions 3 to 7 mentioned previously in the recess wall mounting section.

CAUTION:

High temperature, risk of fire, keep electrical cords, drapery, furnishings, and other combustibles at least 36 in. (915 mm) from the front of the heater and away from the sides. To reduce the risk of fire, do not store or use gasoline or other flammable vapors and liquids in the vicinity of the heater.

IMPORTANT

1- Do not obstruct the front of the heater for at least 48 in. (1200 mm).
2- Install the heater with the air outlet at least 10 in. (254 mm) from the wall or adjacent surface. We recommend positioning the air outlet towards the center of the room.
3- Do not install the venturi of the heater directly in the ceiling. Always install the heater in the ceiling with the recess box.

OPERATING INSTRUCTIONS

1- The heater must be properly installed before it is used.
2- Turn the power on at the circuit breaker panel.
3- This heater includes a visual alarm to warn that parts of the heater are getting excessively hot. If the light turns on, immediately turn the heater off and inspect for any objects on or adjacent to the heater that may have blocked the airflow or otherwise caused high temperatures to have occured.
DO NOT OPERATE THE HEATER WHEN THE ALARM LIGHT IS ON.

WALL THERMOSTAT (sold separately):

Refer to the instruction manual supplied with the wall thermostat.
Electronic thermostat: Be sure to set it on the FAN mode.

MAINTENANCE INSTRUCTIONS

1- Once a year, remove the front panel and use a vacuum cleaner to remove the dust accumulation inside the heater and through openings of the front panel.
2- Cleaning should be done while the heater is disconnected from the main service panel. Wait until the housing and heating element cool before performing maintenance.
3- Replace the front panel before energizing.
4- Any other servicing should be performed by a qualified technician.

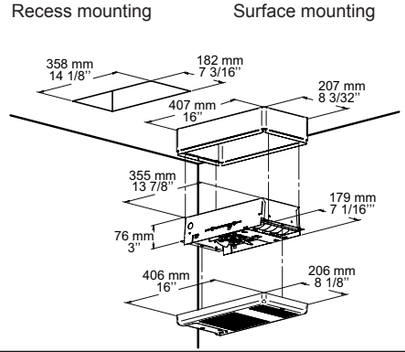

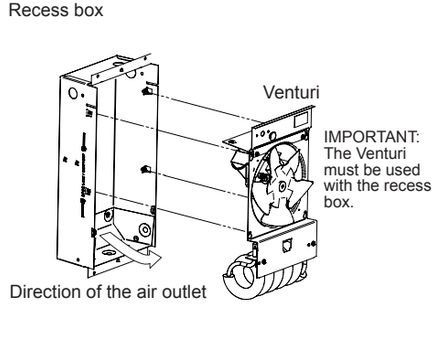

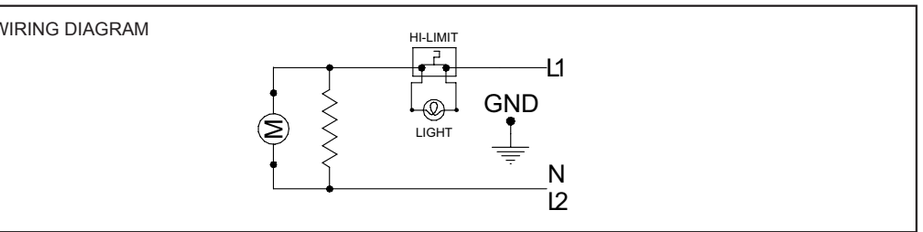

INS508-201504-01