941I SERIES

ARCHITECT'S AND ENGINEER'S SPECIFICATIONS*

The heating equipment shall include an electric automatic 941I Series fan-forced air heater suitable for small area heating as manufactured by Indeeco®. Heaters shall be cETLus Listed. The heater shall be designed for surface or recessed ceiling mounting. For surface mounting, an Indeeco FIF-ASM surface mounting frame shall be used.

BACK BOX: The back box shall be designed for duty as a recessed rough-in box in either masonry or frame construction, and also when mounting directly to the surface of the finished ceiling in surface mounting installations. The back box shall be 20-gauge galvanized steel and shall contain knockouts through which field wiring leads are brought.

INNER FRAME ASSEMBLY: The inner frame assembly shall consist of a 20-gauge steel chassis on which are mounted the heating element, fan motor and blade, fan control and thermal cutout. The inner frame assembly shall be completely pre-wired.

HEATING ELEMENT: The heating element shall be warrantied for five years and shall be of non-glowing design consisting of a special resistance wire, enclosed in a steel sheath to which steel plate fins are brazed. The element shall cover the entire air discharge area to ensure uniform heating of all discharge air.

MOTOR AND CONTROLS: The fan motor shall be impedance protected, permanently lubricated and with totally enclosed rotor. Fan control shall be bi-metallic, snap-action type and shall activate fan after heating element reaches operating temperature, and continue to operate the fan after the thermostat is satisfied and until all heated air has been discharged. Thermal cutout shall be bi-metallic, snap-action type designed to shut off heater in the event of overheating and reactivate the heater when temperatures return to normal.

DISCONNECT SWITCH: A factory installed double-pole single throw disconnect switch shall be provided for positive disconnect of power supply. It will be completely concealed behind the front cover.

FRONT COVER: The louvered front cover shall be of commercial grade steel finished in White baked enamel. It will attach to the fan deck via snaps in the plastic trim pieces and shall have no exposed screw heads.

FINISH: All sheet metal parts, except the front cover and galvanized back box, shall be phosphatized, then completely painted by a baked enamel painting process.

**Indeeco reserves the right to change specifications without prior notice.*

Models & Specifications:

ITEM INFORMATION	ELECTRICAL DATA			
CATALOG NO.	VOLTS	WATTS	AMPS	SHIP WT.
941IF-U1000-W	120	1000	8.3	10 lbs
		500	4.7	10 lbs
941IF-U1500-W	120	1500	12.5	10 lbs
		750	6.3	10 lbs
941IF-U2004-W	240/208	2000/1500	8.3/7.2	10 lbs
		1000/750	4.2/3.6	10 lbs
941IF-U2007-W	277/240	2000/1500	7.2/6.3	10 lbs
		1000/750	3.6/3.1	10 lbs

NOTE: Factory-wired for highest wattage, field-convertible to lower wattages.

Optional Accessories:

CATALOG NO.	DESCRIPTION	SHIP WT.
FIF-ASM-W	Surface mounting sleeve, White	2 lbs
FIF-AS1-W	1 in. Semi-Recessed Frame, White	
FIF-AS2-W	2 in. Semi-Recessed Frame, White	
FIF-HTBF-W	T-Bar Frame Kit, White	5 lbs

NOTE: Requires two separate leads from heater to single-pole wall thermostat.

Mounting Limitations:

Heaters are designed for surface or recessed mounting in ceiling. They must be mounted a minimum of 6' from floor and 24" from any adjacent wall or obstruction.

NOTE: In order to have the fan delay operate correctly, three wires are required between the heater and the wall thermostat. (See figure 1).

Wiring Diagram:

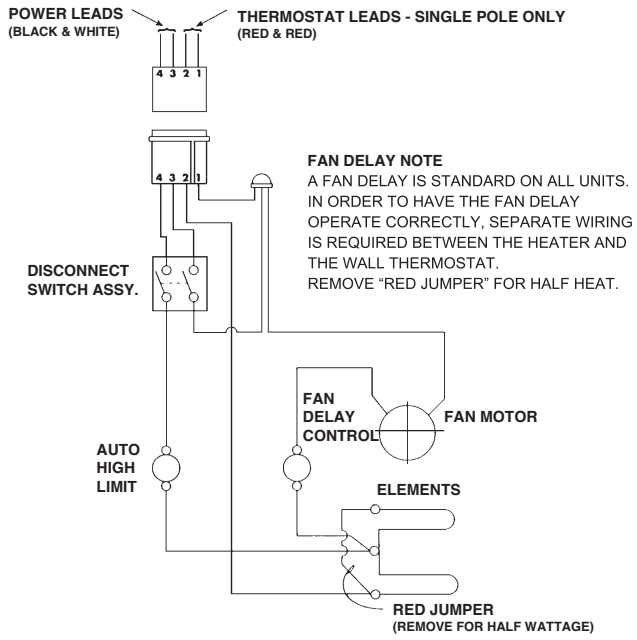

Dimensions and Clearances:

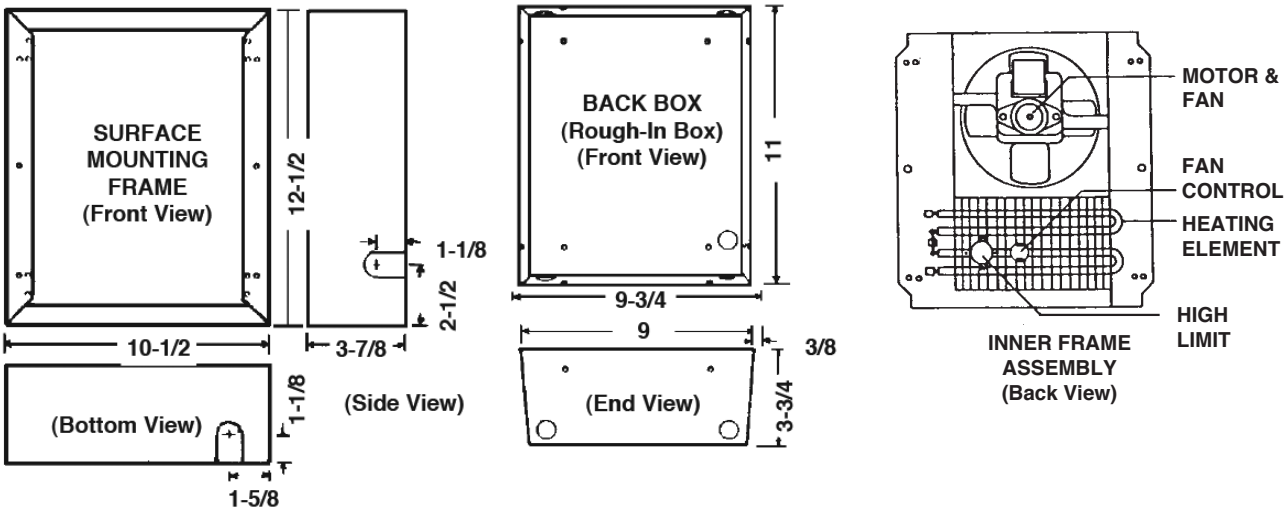

No matter the industry or application, Indeeco has a robust portfolio of innovative, reliable, high-performance comfort heating and ventilation solutions for all your heating needs.

MKL-3944-01