INDEECO



Wall, Ceiling and Floor Heaters

Commercial & Industrial
Electric heating and controls

Our products do more in a wide range of applications. Expect **More.**

INTRODUCTION

Indeeco offers commercial and industrial electric heating and control systems that set the industry standard for excellence. The company's heating solutions reflect more than 85 years of innovation, product quality and efficient service.

Indeeco's line of Comfort Heating Products cover a wide range of commercial and industrial applications. Whether the requirement is for architectural wall heaters, cabinet unit heaters, convector heaters or ceiling heaters, Indeeco has a product to match the application.

Indeeco's quality is matched only by its customer service and support. With its quick-ship delivery program, Indeeco provides the products you need.







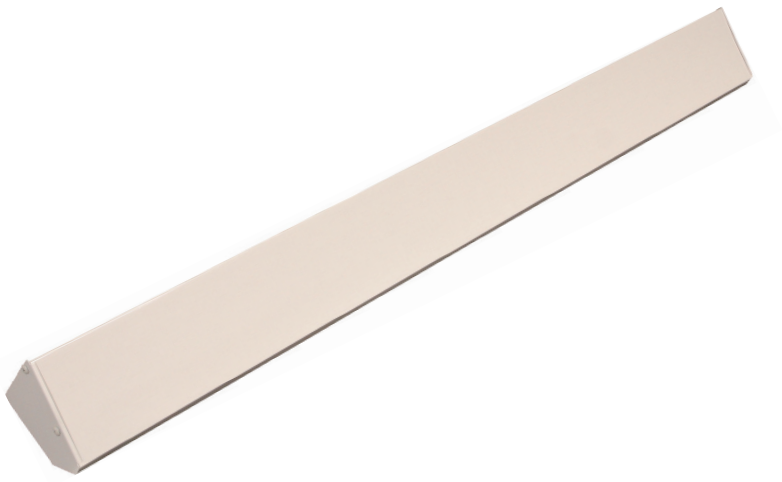

TABLE OF CONTENTS

Comparison Chart 4-5

Wall Heaters

 Architectural Wall Heater WAI (933I) Series 6-7

 Commercial Wall Heater WCI (932I) Series 8-9

 Wall Heater WLI (934I) Series 10-11

 Register Wall Heater WRI (930I) Series 12-13

 Cabinet Unit Heater CUI (922I) Series 14-16

 Residential Wall Heater WCZ (950I) Series 17-18

Ceiling Heaters

 Commercial Ceiling Heater CDI (937I) Series 19-21

 Commercial Ceiling Heater CCI (931I) Series 22-23

 Commercial Ceiling Heater CLI (941I) Series 24-25

Floor Heaters

 Toe-Space Heater TSI (938I) Series 26-27

 Fan Forced Floor Heater FFI (939I) 28

Radiant Panels

 AS Series 29-32

 Cove Heater RCI (918I) Series 33-34

 Invizatherm & Invizatherm Thin Series 35-42

Thermostats 43-44

Specialty Controls 45

How To Order 46

Warranty Period 47

Limited Warranty 48

COMPARISON CHART

Wall, Ceiling and Floor Heaters



Features	Architectural Wall	Commercial Wall	Wall	Register Wall	Residential Wall
	WAI (933I) Series	WCI (932I) Series	WLI (934I) Series	WRI (930I) Series	WCZ (950I) Series
Typical Applications	Vestibules Lobbies Restaurants	Hallways Stairwells Guard Houses	Hallways Basements Waiting Rooms	RVs Storage Rooms Toll Booths	Utility Room Kitchen Basements
Wattage Range	up to 4,800	up to 4,800	up to 2,400	up to 2,000	up to 2,000
Voltages	up to 600/3	up to 600/3	up to 240/1	up to 240/1	up to 240/1
Airflow CFM	100	100	up to 50	up to 50	up to 65
Element Type	Steel Block Finned Tubed	Steel Block Finned Tubed	Steel sheath fin tubed	Steel sheath fin tubed	Steel sheath fin tubed
Standard Construction	18g Bar Grille with Extruded Aluminum	18g steel grille	20g steel grille	20g steel grille	20g steel grille
Finish	Epoxy/Polyester powder paint	Epoxy/Polyester powder paint	Epoxy/Polyester powder paint	Epoxy/Polyester powder paint	Epoxy/Polyester powder paint
Mounting	Surface or recessed	Surface or recessed	Ceiling, Surface, or Recessed	Surface or recessed	Surface or Recessed
Standard Colors	Bronze, White	White	White	White	White
Custom Colors	Yes	Yes	Yes	Yes	Yes
Agency Approvals	cETLus	cETLus	cETLus	cETLus	cETLus

COMPARISON CHART

Wall, Ceiling and Floor Heaters

CLI (941I) Series



CDI (937I) Series





CCI (931I) Series

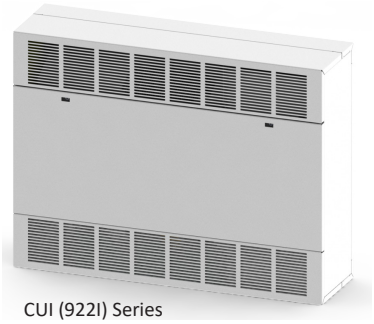

CUI (922I) Series



TSI (938I) Series



FFI (939I) Series

Features	Cabinet	Fan Forced Ceiling	Commercial Ceiling	Commercial Ceiling	Toe-Space	Floor Insert
	CUI (922I) Series	CDI (937I) Series	CCI (931I) Series	CLI (941I) Series	TSI (938I) Series	FFI (939I) Series
Typical Applications	Classrooms Hallways Vestibules	Classrooms Day care Reception areas	Entryways Hallways Restrooms	Entryways Hallways Restrooms	Kitchens Bathrooms Waiting Rooms	Kitchens Dining Rooms Under Windows
Wattage Range	up to 32kw	up to 5kw	up to 4,800	up to 2,000	up to 1,000	up to 1,500
Voltages	up to 600/3	up to 277/1	up to 600/3	277/1	up to 240/1	up to 240/1
Airflow CFM	up to 1,000	up to 300	up to 150	up to 65	up to 80	up to 80
Element Type	Steel Block, Finned Tubed	Steel Block, Finned Tubed	Steel Block, Finned Tubed	Steel Block, Finned Tubed	Steel Block, Finned Tubed	Steel Block, Finned Tubed
Standard Construction	18g Steel and Architectural Grilles	20g Steel and Architectural Grilles	14g Steel	20g Steel	20g Steel	20g Steel
Finish	Epoxy/Polyester powder paint	Epoxy/Polyester powder paint	Epoxy/Polyester powder paint	Epoxy/Polyester powder paint	Epoxy/Polyester powder paint	Epoxy/Polyester powder paint
Mounting	Surface, recessed or ceiling	Surface, Recessed, or T-Bar	Surface, recessed or T-bar	Surface or recessed	Recessed under cabinet	Recessed in floor
Standard Colors	White	White, Beige	Beige	White	Black, White	Charcoal
Custom Colors	Yes	No	Yes	Yes	Yes	Yes
Agency Approvals	cULus	cULus	cULus	cETLus	cETLus	cETLus

WAI (933I) SERIES

Architectural Heavy-Duty Wall Heater



Technical Specifications:

- Temp Range: 40°–90°F
- CFM: 100
- Grille Gauge: 18

Applications:

- Vestibules & Entrance Ways
- Lobbies & Hallways
- Stairwells
- Restaurants
- Conference Rooms
- Offices
- Basements
- Living/Family Room

White Bronze

Standard Construction Features:

- BMS-compatible through an optional relay
- Contemporary bar-stock grille design provides optimized airflow
- Manual reset thermal overheat protector disconnects power in the event of accidental blockage
- Built-in tamper-resistant thermostat
- All units have a permanently lubricated and enclosed fan motor, which creates long life, low maintenance, and gently distributes warmth throughout the area
- Automatic fan delay eliminates cold drafts on start-up and discharges residual heat from the heater body during shut down
- Power on/off switch for added safety during maintenance

WAI (933I) SERIES

Architectural Heavy-Duty Wall Heater

Models & Specifications:

ITEM INFORMATION	ELECTRICAL DATA					
CATALOG NO.	VOLTS	PHASE	WATTS	AMPS	BTU/HR.	SHIP WT.
933IW-3150-S	120	1	1500	12.5	5,118	25 lbs
933IW-4307-S	277	1	3000/1500	10.8/5.4	10,236/5,118	25 lbs
933IW-4404-S	208	1	3000/1500	14.4/7.2	10,236/5,118	25 lbs
	240	1	4000/2000	16.7/8.3	13,649/6,824	25 lbs
933IW-4407-S	240	1	3000/1500	12.5/6.3	10,236/5,118	25 lbs
	277	1	4000/2000	14.4/7.2	13,649/6,824	25 lbs
933IW-4408-S	208	1	4000/2000	19.2/9.6	13,649/6,824	25 lbs
933IW-4504-S	208	1	3600	17.3	12,284	25 lbs
	240	1	4800	20	16,378	25 lbs
933IW-4507-S	240	1	3600	15	12,284	25 lbs
	277	1	4800	17.3	16,378	25 lbs
933IW-4508-S	208	1	4800	23.1	16,378	25 lbs
933IW-3180-S	347	1	3000	8.6	10,236	25 lbs
933IW-4404-S	600	1	3000	5	10,236	25 lbs
933IW-4408-S	347	1	4800	13.8	16,378	25 lbs
933IW-45043-S	600	1	4800	8	16,378	25 lbs
933IW-45083-S	120	1	1800	15	6,142	25 lbs
933IW-4303-S	240	3	4000	9.6	13,649	25 lbs
933IW-4303-S	208	3	4000	11.1	13,649	25 lbs
933IW-4306-S	240	3	4800	11.6	16,378	25 lbs
933IW-4506-S	208	3	4800	13.3	16,378	25 lbs

NOTE: *Factory-wired for higher wattage, field-convertible to half wattage. Units not available to be wired with remote thermostats.
Standard finish is Bronze; For White,For White, replace W with S at the end of the catalog number

Optional Accessories:

CATALOG NO.	DESCRIPTION	SHIP WT.*
WIK-WHPE-X*	Pneumatic/Electric switch. Factory set at 10 psig to "make" on pressure drop. May be field wired to "break" on pressure drop. Pressure set point adjustable to 30 psig. (field-installed)	2 lbs
WIK-WHR2-X (24V)*	Time delay relay 40–60 seconds to close when energized. Use 120V or 24V power supply from remote source (field-installed)	2 lbs
WIK-WHR12-X (120V)*		
WIF-S1F-S	1 in. deep surface mounting frame for semi-recessed installation, Bronze	2 lbs
WIF-S2F-S	2 in. deep surface mounting frame for semi-recessed installation, Bronze	2 lbs
WIF-SMF-S	Surface mounting frame for surface installations. Painted to match heater decor, 3 13/16 in. deep, Bronze	5 lbs
WIF-SMFL-W	Surface Mounting Frame, White	5 lbs
WIF-SMFL1-W	1 in. Semi-Recessed Frame, White	2 lbs
WIF-SMFL2-W	2 in. Semi-Recessed Frame, White	2 lbs
WIC-SFC-W	14-gauge security front cover, White	6 lbs

Note: *Will accommodate pneumatic/electric or low-voltage controls commonly used with computerized energy management systems Mounting Limitations: For wall mounting, do not install back box closer than 8 in. from floor or adjacent wall. Do not install heater behind towel rack, behind door, in floor, in closet, in ceiling or where air flow may be obstructed. All controls are concealed behind the front cover making them essentially tamper proof.

Dimensions and Clearances:

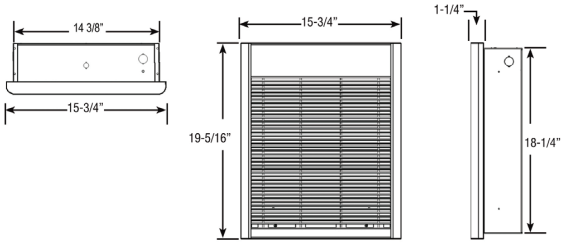

WCI (932I) SERIES

Commercial Fan-Forced Large Wall Heater



Intertek

Technical Specifications:

- Temp Range: 40°–90°F
- CFM: 100
- Grille Gauge: 20

Applications:

- Mechanical Spaces
- Vestibules & Entrance Ways
- Lobbies, Hallways & Stairwells
- Restaurants
- Conference Rooms
- Medical Offices
- Basements
- Living/Family Room

White

Standard Construction Features:

- Contemporary design combined with commercial-grade steel grille to provide comfort through optimized airflow
- Fan-only operation for summer use
- Built-in power on/off switch for added safety during maintenance
- Manual reset thermal overheat protector disconnects power in the event of accidental blockage
- Automatic fan delay eliminates cold drafts on start-up and discharges residual heat from the heater body during shut down
- Integral double-pole thermostat allows for easy adjustment to maintain desired temperature
- All units have a permanently lubricated enclosed fan motor, which creates long life, low maintenance, and gently distributes warmth throughout the area

WCI (932I) SERIES

Commercial Fan-Forced Large Wall Heater

Models & Specifications:

ITEM INFORMATION	ELECTRICAL DATA					
CATALOG NO.	VOLTS	PHASE	WATTS	AMPS	BTU/HR.	SHIP WT.
932IW-3150-W	120	1	1500	12.5	5,118	25 lbs
932IW-3404-W*	240	1	4000/2000	16.7/8.3	13,649/6,824	25 lbs
	208	1	3000/1500	14.5/7.2	10,236/5,118	25 lbs
932IW-3407-W*	277	1	4000/2000	14.5/7.2	13,649/6,824	25 lbs
	240	1	3000/1500	12.5/6.3	10,236/5,118	25 lbs
932IW-3408-W*	208	1	4000/2000	19.2/9.6	13,649/6,824	25 lbs
932IW-3504-W	240	1	4800	20	16,378	25 lbs
	208	1	3600	17.3	12,284	25 lbs
932IW-3507-W	277	1	4800	17.3	16,378	25 lbs
	240	1	3600	15	12,284	25 lbs
932IW-35083-W	208	3	4800	13.4	16,378	25 lbs
932IW-3508-W	208	1	4800	23.1	16,378	25 lbs
932IW-3180-W	120	1	1800	15	6,142	25 lbs
932IW-3307-W*	277	1	3000/1500	10.8/5.4	10,236/5,118	25 lbs
932IW-34043-W	240	3	4000	9.7	13,649	25 lbs
932IW-34083-W	208	3	4000	11.1	13,649	25 lbs
932IW-35043-W	240	3	4800	11.6	16,378	25 lbs
932IW-3153-W	347	1	1500	4.3	5,118	25 lbs
932IW-3203-W	347	1	2000	5.8	6,824	25 lbs
932IW-3303-W	347	1	3000	8.6	10,236	25 lbs
932IW-3403-W	347	1	4000	11.5	13,649	25 lbs
932IW-3503-W	347	1	4800	13.8	16,378	25 lbs
932IW-3156-W	600	1	1500	2.5	5,118	25 lbs
932IW-3206-W	600	1	2000	3.3	6,824	25 lbs
932IW-3306-W	600	1	3000	5	10,236	25 lbs
932IW-3406-W	600	1	4000	6.7	13,649	25 lbs
932IW-3506-W	600	1	4800	8	16,378	25 lbs

*Factory-wired for higher wattage, field-convertible to half wattage. For wall mounting - Do not install back box closer than 8 in. from floor or adjacent wall. Do not install heater behind towel rack, behind door, in floor, in closet, in ceiling or where air flow may be obstructed.

Optional Accessories:

CATALOG NO.	DESCRIPTION	SHIP WT.
WIC-FCTP-W	Tamper-Proof Front Cover, White	2 lbs
WIF-SMFL-W	Surface Mounting Frame, White	5 lbs
WIF-SMFL1-W	1 in. Semi-Recessed Frame, White	2 lbs
WIF-SMFL2-W	2 in. Semi-Recessed Frame, White	2 lbs
WIC-SFC-W	14-gauge Security Front Cover, White	6 lbs

Dimensions and Clearances:

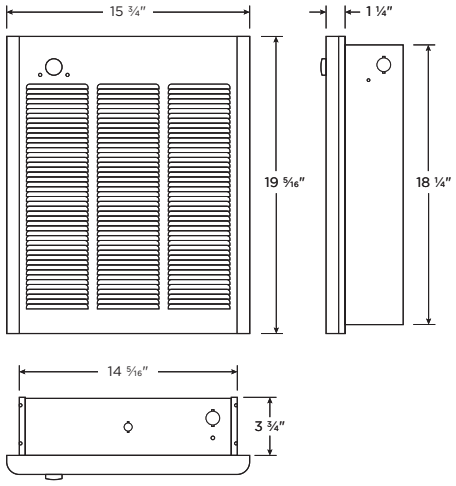

WLI (934I) SERIES

Fan-Forced Small Wall Heater



Technical Specifications:

- Temp Range: 45°–90°F
- CFM: 50
- Grille Gauge: 20

Applications:

- Bedrooms
- Kitchens
- Bathrooms
- Basements
- Offices
- Hallways
- Lobbies
- Waiting Rooms

White

Stainless Steel

Standard Construction Features:

- Ideally suited for recessed shallow wall mount applications such as manufactured homes
- Fast response open coil element for instantaneous heat and low maintenance
- Dual Protection: Thermal cutout with indicator light and one-time thermal fuse
- Field wiring compartment for ease of installation
- Built-in double-pole thermostat on all units
- Ceiling-mount units (1,000 watt units) and surface-mount accessories available
- Internal thermostat can be bi-passed and a external thermostat can be used. See manual for more information.

WLI (934I) SERIES
Fan-Forced Small Wall Heater

Models & Specifications:

ELECTRICAL DATA							
CATALOG NO.	**VOLTS**	**PHASE**	**WATTAGE**	**AMPS**	**BTU/HR.**	**CEILING MOUNT**	**SHIP WT.**
934IW-D1012-C*	120	1	1000	8.3	3410	Yes	12 lbs
934IW-D1512-W	120	1	1500	12.5	5115	No	12 lbs
934IW-D2024-W	240/208	1	2000/1500	8.3/7.2	6820/5115	No	12 lbs
934IW-D1012-W	120	1	1000	8.3	3410	Yes	12 lbs
934IW-D1024-C*	240/208	1	1000/750	4.2/3.6	3410/2557	Yes	12 lbs
934IW-D1024-W	240/208	1	1000/750	4.2/3.6	3410/2557	Yes	12 lbs

NOTE: Units available in built in or wall mounted thermostats. *Stainless Steel models.

Optional Accessories:

CATALOG NO.	DESCRIPTION	SHIP WT.
WIF-DSM-W	White Surface Mounting Frame	3 lbs
WIF-DSMC-C	Stainless Steel Surface Mounting Frame	3 lbs
WIC-DFCW-W	Front Cover — White	2 lbs
WIC-DFCC-C	Front Cover — Stainless Steel	2 lbs

Dimensions and Clearances:

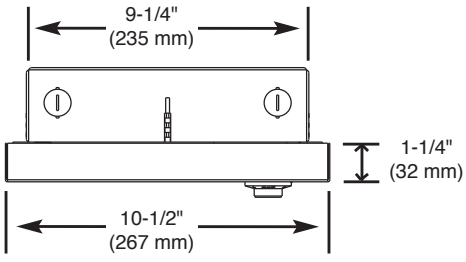

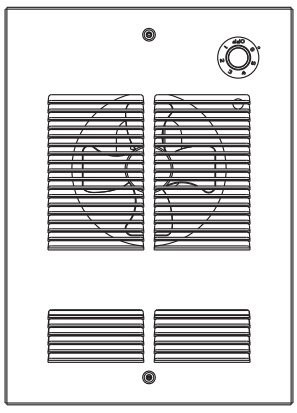

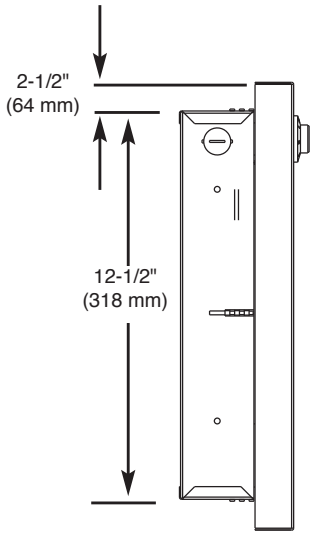

WRI (930I) SERIES

Register Wall Heater



Intertek

Technical Specifications:

- Temp Range: 40°–85°F
- CFM: 50
- Grille Gauge: 20

Applications:

- Bedrooms
- Living/Family Room
- Kitchens
- Bathrooms
- Basements
- Offices
- Conference Rooms
- Waiting Rooms

White

Standard Construction Features:

- CLIP-N-FIT® feature allows installer to change the desired wattage output without moving the jumper wire
- Contemporary register-style grille that blends with any residential or commercial appeal
- Tangential blower for whisper-quiet operation
- Dual Protection: thermal cutout with indicator light and one time thermal fuse
- Permanently lubricated fan motor and dust-protected bearings
- Simple 3-piece construction makes installation easy
- Internal thermostat can be bi-passed and a external thermostat can be used. See manual for more information.

WRI (930I) SERIES
Register Wall Heater

Models & Specifications:

ITEM INFORMATION	ELECTRICAL DATA					
CATALOG NO.	VOLTS	WATTS	AMPS	BTU/HR.	BUILT-IN THERMOSTAT	SHIP WT.
930IW-R1500T2-W	120	1500/1125/750/375	12.5/9.4/6.3/3.1	5120–1280	Double Pole	11 lbs
930IW-R2004T2-W	240*	2000/1500/1000/500	8.3/6.3/4.2/2.1	6826–1706	Double Pole	11 lbs
930IW-R2404T2-W	240*	2400/1800/1200/600	10.0/7.5/5.0/2.5	8192–2048	Double Pole	11 lbs

NOTE: For wall mounting only. Do not install back box closer than 4 in. from floor, 6 in. from adjacent walls and 36 in. from the ceiling. Do not install heater behind towel rack, behind door, in floor, in closet, in ceiling or where airflow may be obstructed. To insure proper operation, maintain 5 ft. minimum clearance to furniture or other objects placed directly in front of the heater.

*Will operate on 208V at 75% of rated wattages. For installations over 7,500 ft. above sea level we recommend using models under 1500 watts. "T2F" Model are complete heater assemblies with grille, back box, and thermostat.

Optional Accessories:

CATALOG NO.	DESCRIPTION	SHIP WT.
WIX-RBB-W	Single Backbox for heater	2 lbs
WIT-RTSP-Z	Single-Pole Thermostat (Field-Installed)	1 lbs
WIT-RTDP-Z	Double-Pole Thermostat (Field-Installed)	1 lbs
WIF-RSM-W	Surface Mounting Frame	2 lbs

Dimensions and Clearances:

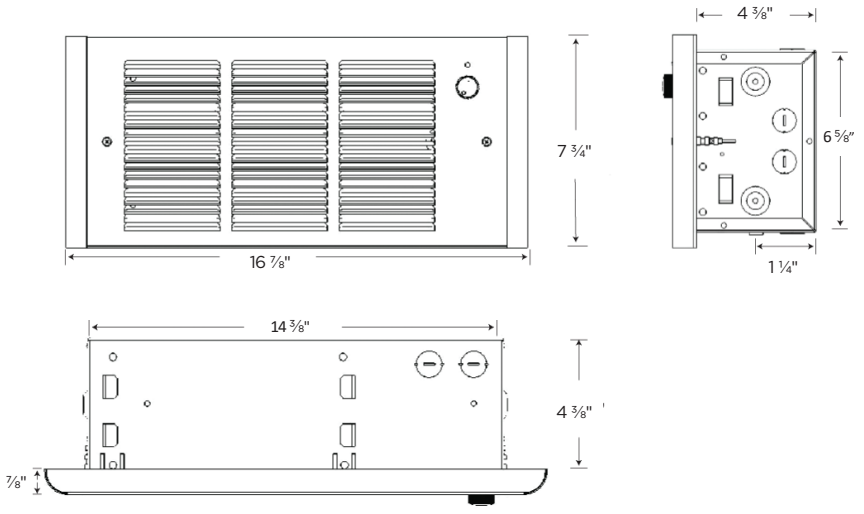

CUI (922I) SERIES
Cabinet Unit Heater

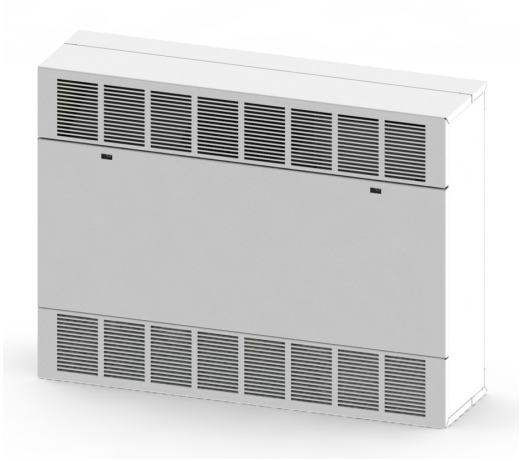

Technical Specifications:

- Temp Range: 55°–85°F
- CFM: 500–1000

Applications:

- School Hallways
- Churches
- Transportation Terminals
- Lobbies
- Stairwells
- Entrance Ways
- Vestibule
- Mechanical Rooms



White Beige Aluminum



Bronze Black

Standard Construction Features:

Contemporary Aesthetics

- Contemporary design to match modern and future architect specifications
- Standard louvered grille with optional ducted grilles

Easy Install and Maintenance

- One-person maintenance on ceiling applications with hinged front panel
- Front cover interlock de-energizes unit when front cover is removed for added safety
- Disposable air filter mounted in inlet air stream; optional permanent and washable aluminum filters available
- Remote or integral thermostat
  - » Single stage remote: MGIIW
  - » 2-stage remote: M600MTP
  - » Connection between T1 & T2 can use low voltage pilot such as T100.

Robust Design

- Cabinet constructed of heavy 16-gauge cold-rolled steel to provide strength and finished with a polyester powder coating for corrosion resistance
- Motors are mounted with automatic thermal overload protection; motor fuse protection is provided on all heaters to meet safety requirements
- Comes standard with two thermal safety cutouts to automatically shut off and protect the heater in the event of overheating. Reactivates the heater when operating temperature returns to normal
- Filter is MERV rating 7
- Can be BMS controlled

CUI (922I) SERIES
Cabinet Unit Heater

Custom Cabinet Unit Heaters: Models and Specifications

SERIES	KW	BTU/HR	FINAL AIR TEMP	CFM*	AMPERAGE						SHIP WT.
					208 | 1Ø	208 | 3Ø	240 | 1Ø	240 | 3Ø	277 | 1Ø	480 | 3Ø	
922IC-35 35 in. (L)	2	6,826	85° F	250	10	6	9	6	8	3	120 lbs
	3	10,239	98° F		15	9	13	8	12	4	
	4	13,652	111° F		20	12	17	10	15	6	
	5	17,065	123° F		25	15	22	13	19	7	
	6	20,478	136° F		30	17	26	15	22	8	
	7	23,891	148° F		34	20	30	18	26	9	
	8	27,304	161° F		39	23	34	20	30	10	
922IC-45 45 in. (L)	4	13,652	85° F	500	20	12	18	11	16	6	160 lbs
	6	27,478	98° F		30	18	26	16	23	8	
	8	27,304	111° F		40	23	34	20	30	11	
	10	34,130	123° F		48	29	43	25	37	13	
	12	40,956	136° F		**59**	34	**51**	30	44	16	
	14	47,782	148° F		**68**	40	**59**	35	**52**	18	
	16	54,608	161° F		**78**	46	**68**	40	**59**	20	
922IC-68 68 in. (L)	15	51,195	123° F	750	**74**	44	**64**	38	**56**	20	260 lbs
	21	71,673	148° F		-	**60**	**89**	**52**	**78**	27	
	24	81,912	161° F		-	**69**	-	**60**	-	31	
922IC-78 78 in. (L)	20	68,260	123° F	1,000	-	**58**	**86**	**50**	**74**	26	300 lbs
	24	81,912	136° F		-	**69**	-	**60**	-	31	
	28	95,564	148° F		-	**80**	-	**70**	-	36	
	32	109,216	161° F		-	**91**	-	**79**	-	41	

NOTE: **BOLD** numbers represent circuit breakers or fused disconnect required. **380V units will operate with a 16% reduction in heating capacity. +Based on 60°F inlet air temperature. *Values shown is high speed.
All models operate at 60hz.

Multiple Air Flow Combinations:

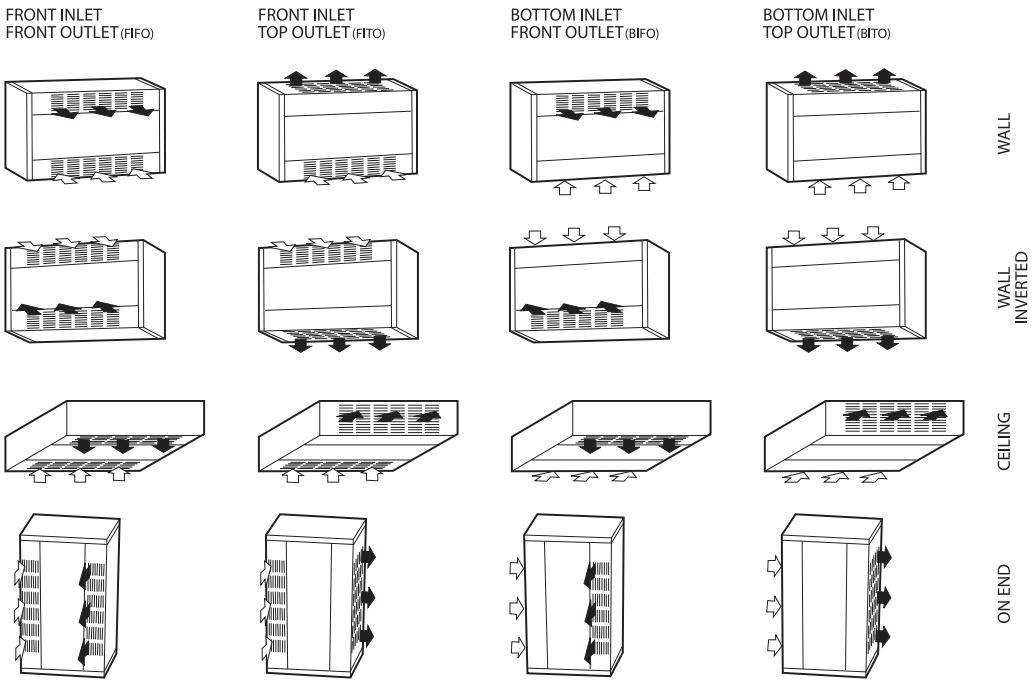

INDEECO

CUI (922I) SERIES

Cabinet Unit Heater

Optional Factory-Installed Accessories:

ACCESSORY	DESCRIPTION	
	STANDARD	OPTIONAL
2-Stage Thermostat Built-or Remote	Built-in (or remote-mounted) single-pole, single-stage thermostat that cycles the element(s) and fan. Fan speed and element wattage selected by the built-in HIGH or LOW selector switch.	Built-in (or remote-mounted) two-stage thermostat that cycles 2/3 of the element for during first stage and full heat during second stage. Fan cycles on high speed only.
Dead Front Disconnect Switch	A three pole non-fused disconnect switch disconnects power to the heater. Design prevents entry into the control compartment until disconnect switch is turned to the OFF position.	Supply terminal block in the control compartment.
Dead Front Fused Disconnect Switch†	A three pole non-fused disconnect switch and circuit breaker(s) sized to the heater load protects heater and disconnects power to the heater.	Design prevents entry into the control compartment until disconnect switch is turned to the OFF position.
On/Off Switch	No switch supplied.	Built-in switch provides continuous fan operation with or without heat, or automatic fan cycling as the heat cycles on and off.
Key Lock For Front Cover	Two (2) slotted head spring latches.	Two (2) toolhead key lock style spring latches prevent unauthorized adjustment of controls and provides additional safety from injury due to contact with internal components.
Inlet or Discharge Duct Collar(S)	Standard Architectural Grilles	Collars provide easy connection of field supplied duct work. We do not recommend exceeding 0.2 in. wg external static pressure. Heater with duct collars are supplied with a single speed high static motor.

† Plus price of circuit breaker.

Optional Accessories:

CATALOG NO.	DESCRIPTION	COMPATIBLE WITH	FUNCTION	SHIP WT.
CIK-35RTK-W	Ceiling or Wall Recess Trim Kit	922I-35	Provides a neat finish to semi-recessed or full recessed application.	3 lbs
CIK-45RTK-W		922I-45		4 lbs
CIK-68RTK-W		922I-68		6 lbs
CIK-78RTK-W		922I-78		7 lbs
CIK-35BK-W	Floor/Toe-Space Base Kit	922I-35	16 gauge, muted black base is recessed from the heater front and sides to provide an attractive and practical floor mounting application.	9 lbs
CIK-45BK-W		922I-45		10 lbs
CIK-68BK-W		922I-68		13 lbs
CIK-78BK-W		922I-78		15 lbs
CIK-35WF-W	Permanent, Reusable Washable Filter	922I-35	Replaces standard filter Washable filter can be cleaned and replaced.	4 lbs
CIK-45WF-W		922I-45		6 lbs
CIK-68WF-W		922I-68		10 lbs
CIK-78WF-W		922I-78		12 lbs

For a different finish, replace the suffix W on the associated catalog number with the appropriate finish letter: B (black), S (bronze), N (beige), A (aluminum). Contact your Indeeco sales representative for more detail.

Dimensions and Clearances:

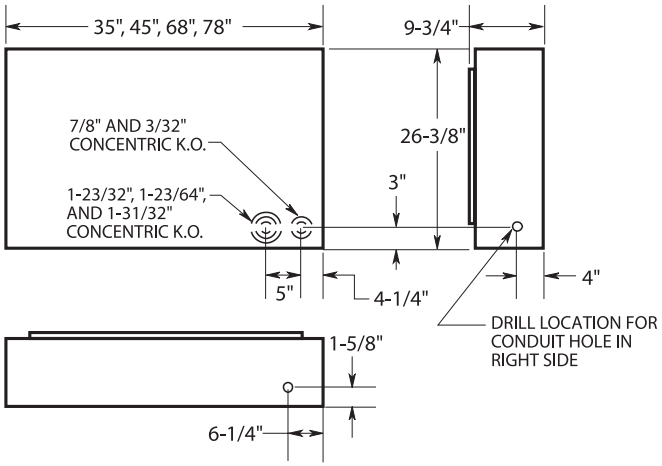

WCZ (950I) SERIES

Residential Fan-Forced Zonal Wall Heater



Technical Specifications:

- Temp Range: 45°–135°F
- CFM: 65
- Grille Gauge: 20

Applications:

- Bedrooms
- Living/Family Room
- Kitchens
- Basements
- Offices
- Conference Rooms
- Waiting Rooms

White

Standard Construction Features:

- Contemporary look and compact size ideal for new residential or commercial installations where space is limited
- CLIP-N-FIT® feature allows installer to change the desired wattage output without moving the jumper wire
- Dual Protection: self-hold limit to protect against overheating, with a one-time thermal fuse backup
- Dual voltage and wattage ratings help reduce inventory levels
- Heater/Fan Assembly fits into back box with a single screw for quick installation and easy service
- Built-in double-pole thermostat with positive OFF position is standard, or a remote, wall mounted thermostat provides localized room control
- Multi-layer impeller provides quiet operation
- Internal thermostat can be bi-passed and a external thermostat can be used. See manual for more information.

WCZ (950I) SERIES

Residential Fan-Forced Zonal Wall Heater

Models & Specifications:

ITEM INFORMATION	ELECTRICAL DATA						
CATALOG NO.	VOLTS (1)	VOLTS (2)	WATTS (1)	WATTS (2)	AMPS (1)	AMPS (2)	SHIP WT.
950IW-1512T-W	120	-	1500/750	-	12.5/6.3	-	11 lbs
950IW-1012T-W	120	-	1000/500	-	8.4/4.2	-	8.1 lbs
950IW-1048T-W	208	240	750/375	1000/500	7.2/3.6	8.4/4.2	11 lbs
950IW-1548T-W	208	240	1125/570	1500/750	5.4/2.7	6.3/3.2	5.6 lbs
950IW-2048T-W	208	240	1500/750	2000/1000	3.6/1.8	4.2/2.1	11 lbs

Optional Accessories:

CATALOG NO.	DESCRIPTION	SHIP WT.
WIT-CZTDP-X	Double-Pole Built-in Thermostat Kit (Range: 45–135°F)	1 lbs
WIF-CZSM-W	Surface Mounting Frame	2 lbs

Dimensions and Clearances:

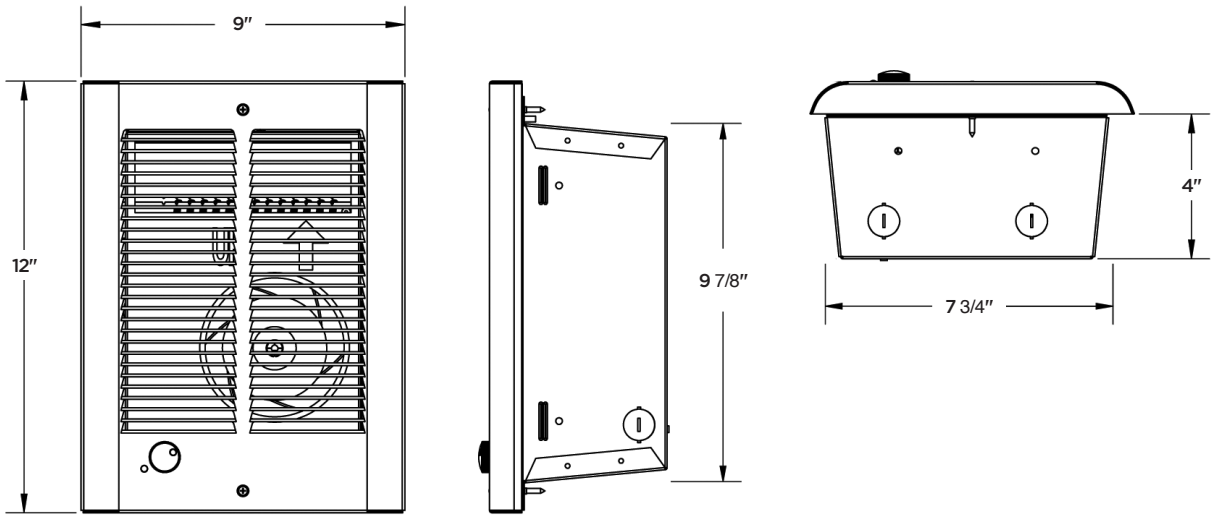

CDI (937I) SERIES
Fan-Forced Ceiling Heater





Technical Specifications:

- Temp Range: 45°–90°F
- CFM: 300
- Grille Gauge: 20

Applications:

- Bathrooms
- Offices
- Conference Rooms
- Lobbies
- Waiting Rooms
- Entrance Ways

White Beige

Standard Construction Features:

- CDISE “surface enclosures” are designed to mount flat on the ceiling and extend only 6 in. into the room
- CDISE “recessed enclosures” have no protrusions outside recess box, allowing the heater to recess only 7 in. into ceiling space. Mounts in T-Bar or permanent ceiling with trim ring
- 208V and 240V heaters can be field-converted from single- to three-phase operation. 5,000-watt heater can be field-converted to 3,800 or 2,500 watts and 4,000-watt heater to 3,000 or 2,000 watts
- BMS-compatible with use of relays
- Three adjustable airflow patterns from 14 ft. ceilings: wide, narrow or asymmetrical patterns
- Automatic fan delay eliminates cold drafts on start-up and discharges residual heat from the heater body during shut down
- Automatic thermal cutout: shuts off the heater in the event of over-heating and reactivates heater when temperature returns to normal
- Easy installation: Thumb pins align and temporarily hold enclosure cover to heating section freeing both hands to finish installation
- Integral stats are tamperproof

CDI (937I) SERIES
Fan-Forced Ceiling Heater

Models & Specifications: Heater Only

ITEM INFORMATION*		ELECTRICAL DATA					
CATALOG NO.	MOUNTING	KW	BTU/HR.	AMPS	VOLTS	PHASE	SHIP WT.
937IF-548A-N	Heater Section Only	4/3/2	13.7/10.2/6.8	19.2/14.2/9.6	208	1-3	27 lbs
937IF-542A-N	Heater Section Only	4/3/2	13.7/10.2/6.8	16.7/12.5/8.3	240	1-3	27 lbs
937IF-547A-N	Heater Section Only	4/3/2	13.7/10.2/6.8	14.4/10.8/7.2	277	1	27 lbs
937IF-558A-N	Heater Section Only	5/3.8/2.5	17.1/13/8.5	24/18.3/12	208	1-3	27 lbs
937IF-552A-N	Heater Section Only	5/3.8/2.5	17.1/13/8.5	20.8/15.8/10.4	240	1-3	27 lbs
937IF-557A-N	Heater Section Only	5/3.8/2.5	17.1/13/8.5	18.1/13.7/9	277	1	27 lbs

Models & Specifications - Packaged Units

ITEM INFORMATION*		ELECTRICAL DATA					SHIP WT.	
SURFACE MOUNT	RECESSED MOUNT	KW	BTU/HR.	AMPS	VOLTS	PHASE	SURFACE MOUNT	RECESSED MOUNT
937IF-548SEA-N	937IF-548REA-N	4/3/2	13.7/10.2/6.8	19.2/14.2/9.6	208	1-3	27 lbs	37 lbs
937IF-542SEA-N	937IF-542REA-N	4/3/2	13.7/10.2/6.8	16.7/12.5/8.3	240	1-3	27 lbs	37 lbs
937IF-547SEA-N	937IF-547REA-N	4/3/2	13.7/10.2/6.8	14.4/10.8/7.2	277	1	27 lbs	37 lbs
937IF-558SEA-N	937IF-558REA-N	5/3.8/2.5	17.1/13/8.5	24/18.3/12	208	1-3	27 lbs	37 lbs
937IF-552SEA-N	937IF-552REA-N	5/3.8/2.5	17.1/13/8.5	20.8/15.8/10.4	240	1-3	27 lbs	37 lbs
937IF-557SEA-N	937IF-557REA-N	5/3.8/2.5	17.1/13/8.5	18.1/13.7/9	277	1	27 lbs	37 lbs

**Unit includes heater and corresponding mounting kit.*

Optional Accessories:

CATALOG NO.	DESCRIPTION	SHIP WT.
FIE-SEB-N	Surface-mounted enclosure (Beige) — to be used With above heater section. 20″ L x 16 ½″ W x 5 ¾″ D	10 lbs
FIE-REB-N	Recessed-mounted enclosure (Beige) — to be used With above heater section. 23 ¾″ L x 23 ¾″ W x 7″ D	18 lbs
FIE-SEBNW-W	Surface-mounted White — to be used With above heater section. 20″ L x 16 ½″ W x 5 ¾″ D	10 lbs
FIE-REBNW-W	Recessed-mounted White — to be used With above heater section. 23 ¾″ L x 23 ¾″ W x 7″ D	18 lbs
FIT-500T-Z	Integral thermostat SPST — Range 45 to 95°F	1 lbs
FIR-24R-Z	Relay (Time Delay 45–60 sec. to close when energized) requires 24V supply from remote source	1 lbs
FIR-R12-Z	Relay (Time Delay 45–60 sec. to close when energized) requires 120V supply from remote source	1 lbs
FIS-DS-Z	Power Disconnect Switch (3-Pole) 30 amps, 600 volts, 3Ø, 60 Hz	1 lbs
FIK-TK-N	Trim Ring for mounting on permanent ceiling (cannot be factory installed)	1 lbs
FIR-TR4-Z	208/240V Primary Transformer/24V sec. and 24V holding coil control relay	1 lbs
FIR-TR7-Z	277V Primary Transformer/24V sec. and 24V holding coil control relay	1 lbs

NOTE: Factory-wired for highest wattage, field-convertible to lower wattages. Factory-wired 1-PH, field convertible to 3-PH dual-phase units, maximum amp draw is listed. Amperage shown is for single phase. For factory installation of above controls, additional charges apply.

Integral stats are not standard available as field option

CDI (937I) SERIES
Fan-Forced Ceiling Heater

Dimensions and Clearances:

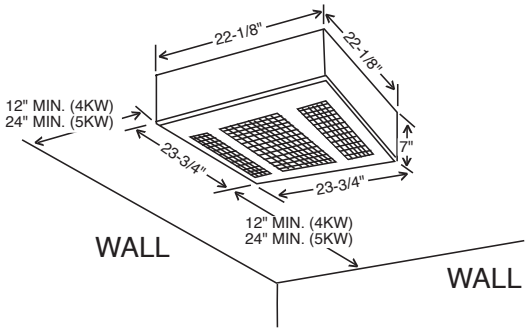

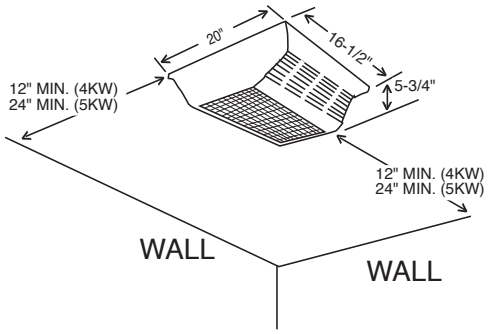

Adjustable Airflow Options:

Wide Pattern
(24x8 ft. coverage)
In standard ceiling applications (8–10 ft.), heater disperses the air to give a gentle, less pronounced pattern while circulating all the air from floor to ceiling.

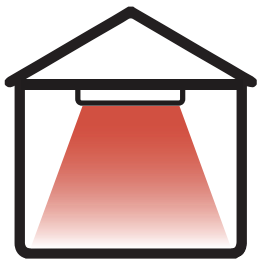

Narrow Pattern
(8x8 ft. coverage)
For high ceiling applications (11–14 ft.), fan concentrates the heated air to ensure full penetration to the floor level.

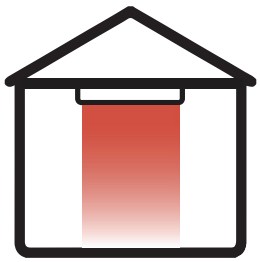

Asymmetrical Pattern
(17x10 ft. coverage)
Heated air is directed in a specific direction, allowing the heater to be located where space allows, with the heated air delivered to where it is required.

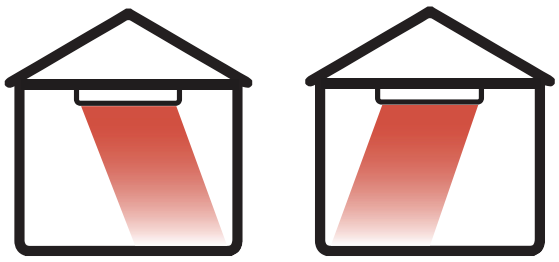

INDEECO

CCI (931I) SERIES
Commercial Ceiling Heater



Intertek

Technical Specifications:

- Temp Range: 40°–90°F
- CFM: 150
- Grille Gauge: 14

Applications:

- Hallways
- Lobbies
- Entryways
- Restrooms
- Detention Environments

Beige

Standard Construction Features:

Choose these fan-forced ceiling heaters anywhere it makes sense to keep your heating solution out of the way and out of reach. A comfort solution for lobbies, restrooms and educational environments.

- Multiple mounting options: Recessed, Surface or T-Bar
- Accommodates pneumatic/electric or low voltage controls commonly used with BMS Systems
- Built in power on/off switch for safe, simple installation and maintenance
- When using wall thermostat, separate thermostat wiring is required
- Automatic fan delay eliminates cold drafts on start-up and discharges residual heat from the heater body during shut down
- Heavy duty 14-gauge louvered front cover grille with tamper-resistant screws provide added security and durability
- Remote thermostats available; i.e. M600S can be used to control two units, pending amperage requirements are met.

CCI (931I) SERIES
Commercial Ceiling Heater

Models & Specifications:

ELECTRICAL DATA						
CATALOG NO.	**VOLTS**	**PHASE**	**WATTS**	**AMPS**	**BTU/HR**	**SHIP WT.**
931IF-F1500-N	120	1	1500	12.5	5120	23 lbs
931IF-F3007-N	277	1	3000/1500	10.8/5.4	10239/5120	23 lbs
931IF-F4008-N	208	1	4000/2000	19.2/9.8	13652/6826	23 lbs
931IF-F4004-N	240	1	4000/2000	16.7/14.4	13652/10239	23 lbs
	208	1	3000/1500		10239/5120	
931IF-F4007-N	277	1	4000/2000	14.4/12.5	13652/10239	23 lbs
	240	1	3000/1500		10239/5120	
931IF-F4804-N	240/208	1	4800/3600	20.0/17.3	16382/12287	23 lbs
931IF-F4807-N	277/240	1	4800/3600	17.3/15.0	16382/12287	23 lbs
931IF-F48483-N	480	3	4800	5.8	16382	23 lbs
931IF-F48483L-N	480	3	4800	5.8	16382	23 lbs
931IF-F3003-N	347	3	3000	8.6	10239	23 lbs
EFF3006	600	3	3000	5	10239	23 lbs
931IF-F4003-N	347	3	4000	11.5	13652	23 lbs
931IF-F4006-N	600	3	4000	6.7	13652	23 lbs
931IF-F4803-N	347	3	4800	13.8	16382	23 lbs
931IF-F4806-N	600	3	4800	8	16382	23 lbs

NOTE: Factory-wired for highest wattage, field-convertible to lower wattages. Orders above 7500' sea level require special order

Optional Accessories:

CATALOG NO.	DESCRIPTION	SHIP WT.
FIF-FSM-N	Surface Mounting Sleeve - Beige	6 lbs
FIR-FR2-Z (24V)	Time delay relay, 45-60 seconds to close when energized; Uses remote 24V or 120V power source	1 lbs
FIR-FR12-Z (120V)		
FIF-FTBF-N	T-Bar Frame Kit	4.5 lbs
FIT-FT1-Z	Single Pole T-Stat. (Field Installed)	1 lbs
FIT-FFT2-Z	Double Pole Thermostat. (Field Installed)	2 lbs
FIR-FTR4-Z	208/240V Primary Transformer 24V Relay	1 lbs
FIR-FTR7-Z	277V Primary 24V Sec. Transformer Relay	1 lbs

Dimensions and Clearances:

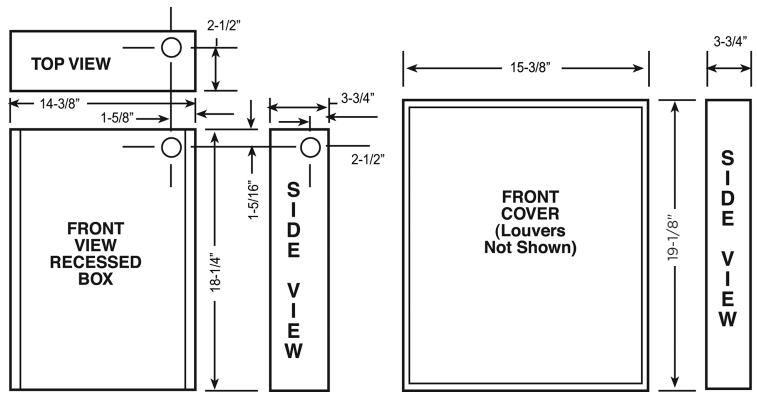

CLI (941I) SERIES

Fan-Forced Ceiling Heater



Intertek

Technical Specifications:

- Temp Range: 45°–95°F
- CFM: 65
- Grille Gauge: 20

Applications:

- Basements
- Offices & Lobbies
- Converted Attics
- Bathrooms
- Workshops
- Hallways & Common Areas

White

Standard Construction Features:

- Dual voltage and wattage
- Built-in power on/off switch
- Thermal cutout to shut off heater in case of overheating
- Easy installation with a three-piece design
- Automatic fan delay eliminates cold drafts on start-up and discharges residual heat from the heater body during shut down
- Recessed or surface installation options available
- Remote wall thermostat required

CLI (941I) SERIES
Fan-Forced Ceiling Heater

Models & Specifications:

ELECTRICAL DATA				
CATALOG NO.	**VOLTS**	**WATTS**	**AMPS**	**SHIP WT.**
941IF-U1000-W	120	1000	8.3	10 lbs
		500	4.7	10 lbs
941IF-U1500-W	120	1500	12.5	10 lbs
		750	6.3	10 lbs
941IF-U2004-W	240/208	2000/1500	8.3/7.2	10 lbs
		1000/750	4.2/3.6	10 lbs
941IF-U2007-W	277/240	2000/1500	7.2/6.3	10 lbs
		1000/750	3.6/3.1	10 lbs

NOTE: Factory-wired for highest wattage, field-convertible to lower wattages.

Optional Accessories:

CATALOG NO.	DESCRIPTION	SHIP WT.
FIF-ASM-W	Surface mounting sleeve, White	2 lbs
FIF-AS1-W	1 in. Semi-Recessed Frame, White	
FIF-AS2-W	2 in. Semi-Recessed Frame, White	
FIF-HTBF-W	T-Bar Frame Kit, White	5 lbs

NOTE: Requires two separate leads from heater to single-pole wall thermostat.

Dimensions and Clearances:

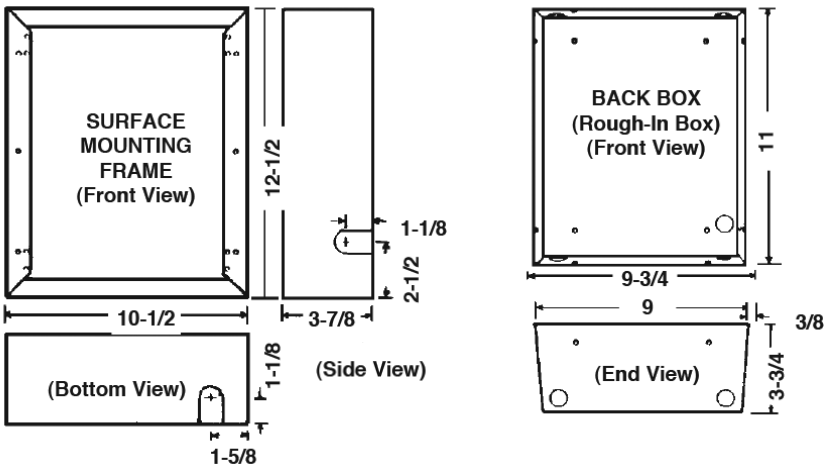

TSI (938I) SERIES

Fan-Forced Toe-Space Heater



Technical Specifications:

- Temp Range: 45°–85°F

Applications:

- Kitchens
- Bathrooms
- Offices
- Small Stairwells
- Small Waiting Rooms

White Black

Standard Construction Features:

This electric toe kick heater installs under cabinets in kitchens, bathrooms, stairwells and more — providing floor-level warmth whenever you need it. Get quiet, even heat in a slim design that saves wall and floor space.

- Tangential blower for quiet operations
- Ability to reduce wattage by half when needed
- Thermal cutout indicated with pilot light protects against overheating
- Steel plate finned element In a uniform grid pattern for uniform heating
- Built-in thermostat models available
- Three-piece construction for easy installation
- Use with built-in thermostat or remote wall-mounted thermostat
- Internal thermostat can be bi-passed and a external thermostat can be used. See manual for more information.

TSI (938I) SERIES
Fan-Forced Toe-Space Heater

Models & Specifications:

ELECTRICAL DATA				
CATALOG NO.	**VOLTS**	**WATTS**	**AMPS**	**SHIP WT.**
938IW-S1100-B*	120	1125/563	9.4/4.7	10 lbs
938IW-S1104-B*	240	1125/563	4.7/2.3	10 lbs
	208	844/422	4.1/2.0	
938IW-S1500T-B**	120	1500/750	12.5/6.3	11 lbs
938IW-S1504T-B**	240/208	1500/750	6.3/3.1	11 lbs
		1125/564	5.4/2.7	

*Models require TIK-STSP-X or remote wall-mounted thermostat. **Models shipped with single-pole thermostat installed.
**For a White finish, replace the suffix B with a W on the associated catalog number. Contact your Indeeco sales representative for more detail.*

Optional Accessories:

CATALOG NO.	DESCRIPTION	SHIP WT.
WIC-SAG-B	Adapter Grille 3 1/2" H x 23 3/8" W	1 lbs
TIK-STSP-X	120–240V Thermostat Kit	1 lbs

Dimensions and Clearances:

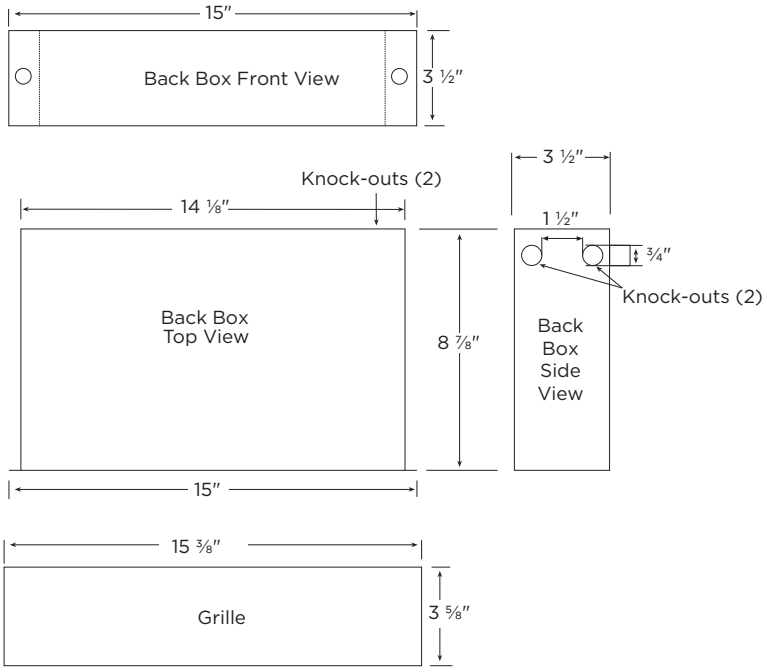

FFI (939I) SERIES

Fan Forced Floor Heater



Technical Specifications:

- Temp Range: 55°–90°F
- CFM: 80

Applications:

- Vestibules
- Bathrooms
- Hallways
- Bedrooms

Charcoal

Standard Construction Features:

For ground level comfort, choose a drop-in unit heater. These units are specifically designed to be placed into flooring for an unobtrusive heating solution that keeps building occupants warm without taking up extra space.

- Universal size combined with a heavy-duty steel grille for durability
- Quick Installation – mounts between floor joists parallel or perpendicular
- Overheat thermal protection for peace of mind
- Flow pattern is 5 ft. wide and 4 ft. high
- Push-on tab wire terminals for easy and quick installation
- Quiet operation
- Internal thermostat can be bi-passed and a external thermostat can be used. See manual for more information.

Models & Specifications:

ELECTRICAL DATA					
CATALOG NO.	CFM	VOLTS	WATTS	AMPS	SHIP WT.
939IW-I1500-G	80	120	1500/750	12.5/6.3	10 lbs
939IW-I1504-G	80	240	1500/750	6.3/3.1	10 lbs
	80	208	1125/562	5.4/2.7	

NOTE: 60 Hz single-phase. Do not install in bathroom or other areas where water may enter heater unit. Do not locate where air flow may be obstructed (under drapes, behind doors, etc.).
Keep short side 36 in. min. and long side 3 in. min. from side walls. Do not install in ceiling or wall.

Optional Accessories:

CATALOG NO.	DESCRIPTION	SHIP WT.
TIK-ITSP-X	120-240V Thermostat Kit	1

Dimensions and Clearances:

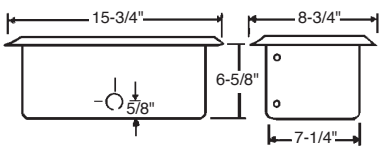

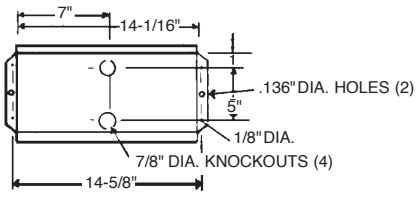

AS SERIES

Radiant Ceiling Panels



Intertek

Applications:

- Atriums
- Enclosed Walkways
- Entryways
- Hospitals
- Lobbies
- Offices
- Schools
- Warehouses

AS Series radiant panels are ideal for offsetting heat loss through exterior glass on the perimeter of a building. They help to control the problem of condensation typically found with these large exterior glass walls. Radiant panels provide improved comfort by maintaining an even temperature from floor to ceiling.

- **Radiant Heat:** Radiant energy travels in straight lines and is absorbed by objects in the room, warming the space. Air quality is maintained because no forced air movement occurs with radiant heating.
- **Maximize Work Area:** Ceiling mounted panels permit full use of floor and wall space.
- **Maintenance Free:** Radiant panels have no moving parts, so they are maintenance free and can provide years of quiet, safe and clean operation.

Standard Construction Features:

Heating Element – High quality alloy resistance wire is electrically insulated with a UL Listed PTFE® compound rated for 250°C (482°F). Heating wires are covered with high-efficiency reflective foil.

Panel Design – Panel is made of 22-gauge galvanized steel with a white baked-on powder paint finish. Panel is crimped, not riveted, for improved strength.

Insulation – Each panel contains two inches of high temperature/high density mineral wool insulation.

Electrical – Integrated junction box is built into each panel for field wiring and to connect panels to each other.

Installation Requirements – Heater can be installed in suspended T-bar ceiling systems or can be surface or recessed mounted using optional mounting frames.

Heater comes equipped with four suspension clips. Connecting wire or chain is supplied by customer.

Minimum recommended mounting height is eight feet from the floor.

Rough In Dimensions – for Plaster Mounting Frames only

- PF-22: 24-3/16” x 24-3/16”
- PF-24: 24-3/16” x 48-3/16”
- PF-1448: 14-3/16” x 48-3/16”
- PF-1460: 14-3/16” x 60-3/16”

Note: For steel frame structures order a sample frame to ensure your openings are accurate

AS SERIES

Radiant Ceiling Panels

Factory Built-in Options

CODE	DESCRIPTION
FC	48” Flexible conduit
S	Silicone seams, provides protection in high moisture areas. Includes 36” of sealtite conduit.

Finishes

CODE	DESCRIPTION
O	Specify custom color finish.
PT	Standard finish; textured white baked-on powder coating on front panel.
S304	304 Stainless steel construction, includes 36” of sealtite conduit and silicone seal.

Field-Installed Options

(shipped loose for field installation into heater)

CATALOG NUMBER	WIDTH IN. (MM)	LENGTH IN. (MM)	WEIGHT LB. (KG)
Surface Mounting Frames			
SF-22	24 (610)	24 (610)	4 (1.8)
SF-24	24 (610)	48 (1219)	9 (4.1)
SF-1448	14 (356)	48 (1219)	8 (3.6)
SF-1460	14 (356)	60 (1524)	10 (4.5)
Plaster Mounting Frames			
PF-22	24 (610)	24 (610)	2 (1.0)
PF-24	24 (610)	48 (1219)	4 (1.8)
SPF-24 (1)	24 (610)	48 (1219)	4 (1.8)
PF-1448	14 (356)	48 (1219)	5 (2.3)
PF-1460	14 (356)	60 (1524)	6 (2.7)
Filler Panel			
FP	Sized and finished to match standard, custom color.		

(1) Stainless steel frame, specify 304.
Add finish code to end of catalog number.

Control Options

CATALOG NUMBER	DESCRIPTION
SR-LV	SmartRooms low voltage controller. Sensor(s) must be ordered at the same time. Requires connection to SmartRooms Communication Panel.
PL-1	Plaster ring for SR-LV Controller
Sensors	Used with SR-240/120, 15’ long
	Longer length add per foot
SRDP-10/10	SmartRooms Panel w/10comm. Ports and 10 ea. 20 amp relays
SRDP-10/20	SmartRooms Panel w/10comm. Ports and 20 ea. 20 amp relays
SRDP-20/20	SmartRooms Panel w/20comm. Ports and 20 ea. 20 amp relays

AS SERIES

Radiant Ceiling Panels

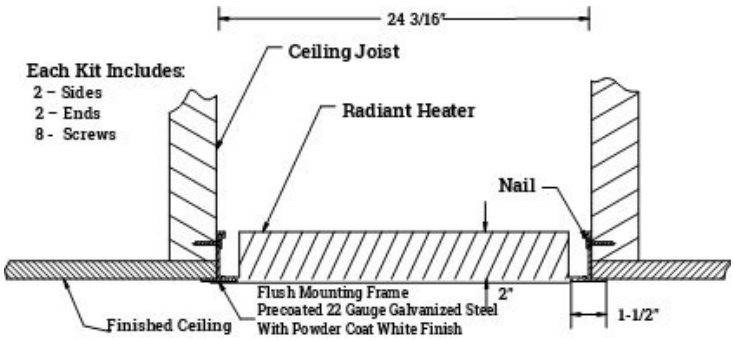

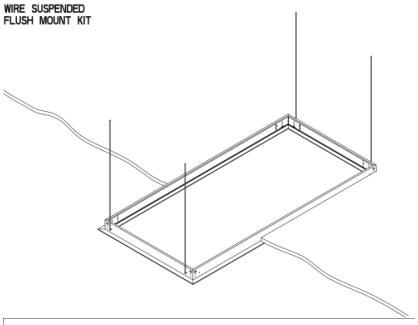

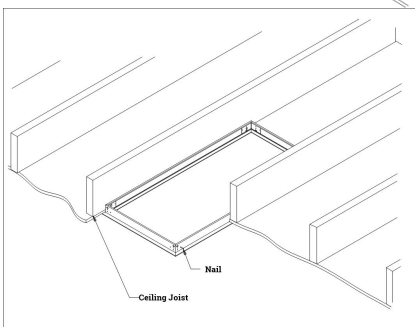

Note: a "thin" heater version is available with a 4' conduit.

Surface Frame

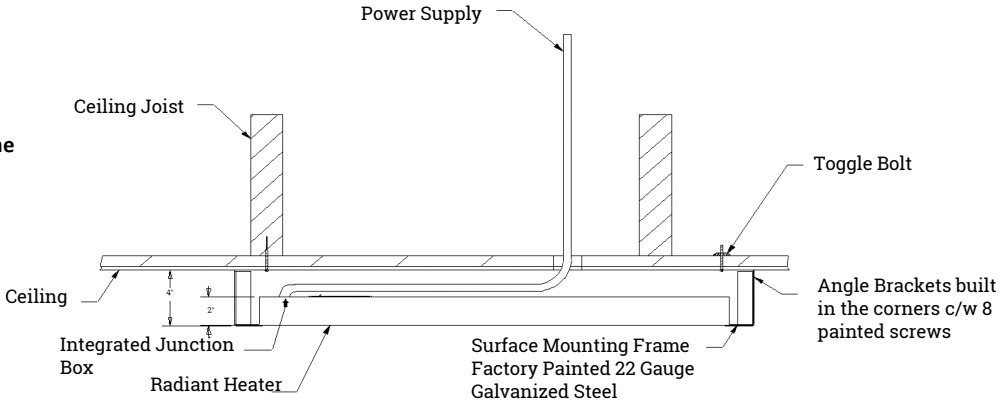

Cutaway View of AS Series

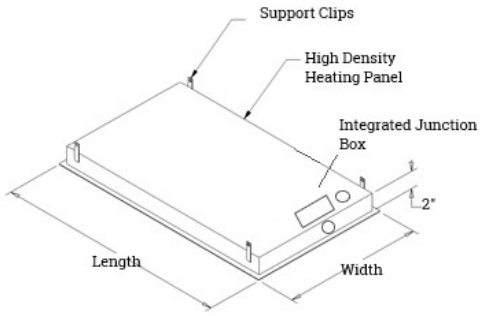

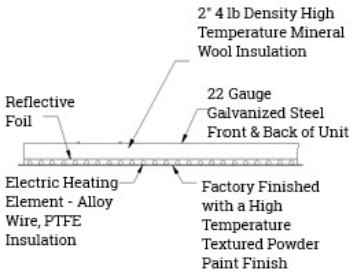

AS SERIES

Radiant Ceiling Panels

AS - Radiant Ceiling Panels Listing

WATTS	VOLTS (1 PHASE)	WIDTH IN. (MM)	HEIGHT IN. (MM)	AMPS	WEIGHT LB. (KG)	CATALOG NUMBER
24 x 24						
250	120	24 (610)	24 (610)	2.1	15 (6.8)	AS2424-250-120
250	240	24 (610)	24 (610)	1.0	15 (6.8)	AS2424-250-240
250	277	24 (610)	24 (610)	0.9	15 (6.8)	AS2424-250-277
310	120	24 (610)	24 (610)	2.6	15 (6.8)	AS2424-310-120
310	208	24 (610)	24 (610)	1.5	15 (6.8)	AS2424-310-208
310	240	24 (610)	24 (610)	1.3	15 (6.8)	AS2424-310-240
310	277	24 (610)	24 (610)	1.1	15 (6.8)	AS2424-310-277
325	240	24 (610)	24 (610)	1.4	15 (6.8)	AS2424-325-240
335	120	24 (610)	24 (610)	2.8	15 (6.8)	AS2424-335-120
335	277	24 (610)	24 (610)	1.2	15 (6.8)	AS2424-335-277
375	120	24 (610)	24 (610)	3.1	15 (6.8)	AS2424-375-120
375	208	24 (610)	24 (610)	1.8	15 (6.8)	AS2424-375-208
375	277	24 (610)	24 (610)	1.4	15 (6.8)	AS2424-375-277
24 x 48						
500	120	24 (610)	48 (1219)	4.2	30 (13.6)	AS2448-500-120
500	240	24 (610)	48 (1219)	2.1	30 (13.6)	AS2448-500-240
500	277	24 (610)	48 (1219)	1.8	30 (13.6)	AS2448-500-277
515	208	24 (610)	48 (1219)	2.5	30 (13.6)	AS2448-515-208
535	208	24 (610)	48 (1219)	2.6	30 (13.6)	AS2448-535-208
625	120	24 (610)	48 (1219)	5.2	30 (13.6)	AS2448-625-120
625	208	24 (610)	48 (1219)	3.0	30 (13.6)	AS2448-625-208
625	240	24 (610)	48 (1219)	2.6	30 (13.6)	AS2448-625-240
660	277	24 (610)	48 (1219)	2.4	30 (13.6)	AS2448-660-277
725	240	24 (610)	48 (1219)	3.0	30 (13.6)	AS2448-725-240
750	120	24 (610)	48 (1219)	6.3	30 (13.6)	AS2448-750-120
750	208	24 (610)	48 (1219)	3.6	30 (13.6)	AS2448-750-208
750	277	24 (610)	48 (1219)	2.7	30 (13.6)	AS2448-750-277
14 x 48						
300	240	14 (356)	48 (1219)	1.3	18 (8.2)	AS1448-300-240
350	120	14 (356)	48 (1219)	2.9	18 (8.2)	AS1448-350-120
350	277	14 (356)	48 (1219)	1.3	18 (8.2)	AS1448-350-277
400	208	14 (356)	48 (1219)	1.9	18 (8.2)	AS1448-400-208
435	208	14 (356)	48 (1219)	2.1	18 (8.2)	AS1448-435-208
435	240	14 (356)	48 (1219)	1.8	18 (8.2)	AS1448-435-240
435	277	14 (356)	48 (1219)	1.6	18 (8.2)	AS1448-435-277
14 x 60						
350	120	14 (356)	60 (1524)	2.9	22 (10.0)	AS1460-350-120
375	240	14 (356)	60 (1524)	1.6	22 (10.0)	AS1460-375-240
375	277	14 (356)	60 (1524)	1.4	22 (10.0)	AS1460-375-277
450	208	14 (356)	60 (1524)	2.2	22 (10.0)	AS1460-450-208
535	277	14 (356)	60 (1524)	1.9	22 (10.0)	AS1460-535-277
550	240	14 (356)	60 (1524)	2.3	22 (10.0)	AS1460-550-240

Add finish code to end of catalog number. See page 33.

RCI (918I) SERIES
Cove Heater

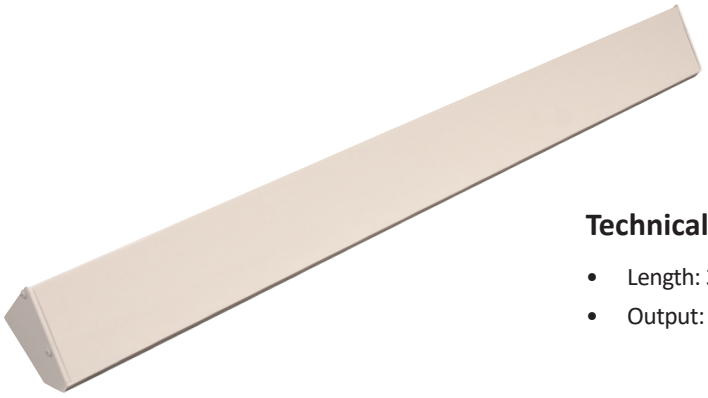

Technical Specifications:

- Length: 34”–132”
- Output: 450–1800 watts

Applications:

- Offices & Retail Spaces
- Hallways & Lobbies
- Conference Rooms
- Day Care Centers
- Geriatric Facilities
- Laboratories
- Living Room & Kitchens
- Bathrooms & Basements

Textured White

Standard Construction Features:

- Ideal for primary or supplemental comfort heat
- Perfect where wall space is limited and gentle heat is desired
- Provides clean, gentle, comfortable heat while allowing full usage of wall and floor spaces
- No noise. No moving parts. No maintenance. No ceilings, walls or drapes to clean. No dry air
- Extruded aluminum front panel provides a high efficiency, radiating surface
- Coated with high temperature textured paint, unit radiates a majority of its heat energy from front surface
- New profile and unique hanging system provide optimal heat dissipation for uniform comfort
- Easily wall-mounted; with all parts included

RCI (918I) SERIES

Cove Heater

Models & Specifications:

ITEM INFORMATION	ELECTRICAL DATA				DIMENSIONAL DATA	
CATALOG NO.	VOLTS	WATTS	BTU/HR.	AMPS	LENGTH	SHIP WT.
918IR-4524-W	240	450	1536	2.2	34"	4 lbs
918IR-6024-W	240	600	2048	2.5	47"	6 lbs
918IR-7524-W	240	750	2560	3.1	59"	7 lbs
918IR-9024-W	240	900	3072	3.7	71"	8 lbs
918IR-10524-W	240	1050	3583	4.4	83"	9 lbs
918IR-12024-W	240	1200	4095	5.0	94"	10 lbs
918IR-15024-W	240	1500	5120	6.2	118"	13 lbs
918IR-18008-W	208	1800	6142	8.7	132"	15 lbs
918IR-4512-W	120	450	1536	2.2	34"	4 lbs
918IR-4508-W	208	450	1536	2.2	34"	4 lbs
918IR-6012-W	120	600	2048	5.0	47"	6 lbs
918IR-6008-W	208	600	2048	2.9	47"	6 lbs
918IR-6027-W	277	600	2048	2.2	47"	6 lbs
918IR-7512-W	120	750	2560	6.2	59"	7 lbs
918IR-7508-W	208	750	2560	3.6	59"	7 lbs
918IR-7527-W	277	750	2560	2.7	59"	7 lbs
918IR-9012-W	120	900	3072	7.5	71"	8 lbs
918IR-9008-W	208	900	3072	4.3	71"	8 lbs
918IR-9027-W	277	900	3072	3.2	71"	8 lbs
918IR-10512-W	120	1050	3583	8.8	83"	9 lbs
918IR-10508-W	208	1050	3583	5.0	83"	9 lbs
918IR-10527-W	277	1050	3583	3.8	83"	9 lbs
918IR-12012-W	120	1200	4095	10.0	94"	10 lbs
918IR-12008-W	208	1200	4095	5.8	94"	10 lbs
918IR-12027-W	277	1200	4095	4.3	94"	10 lbs
918IR-15008-W	208	1500	5120	7.2	118"	13 lbs
918IR-15027-W	277	1500	5120	5.4	118"	13 lbs
918IR-18024-W	240	1800	6142	7.5	132"	15 lbs
918IR-18027-W	277	1800	6142	6.5	132"	15 lbs

Optional Accessories:

CATALOG NO.	DESCRIPTION	SHIP WT.
918IR-T-W	Integral Thermostat: Range 45–90°F with Positive Off	1 lbs
918IR-SP-W	Splice Plate Assembly	2 lbs

Dimensions and Clearances:

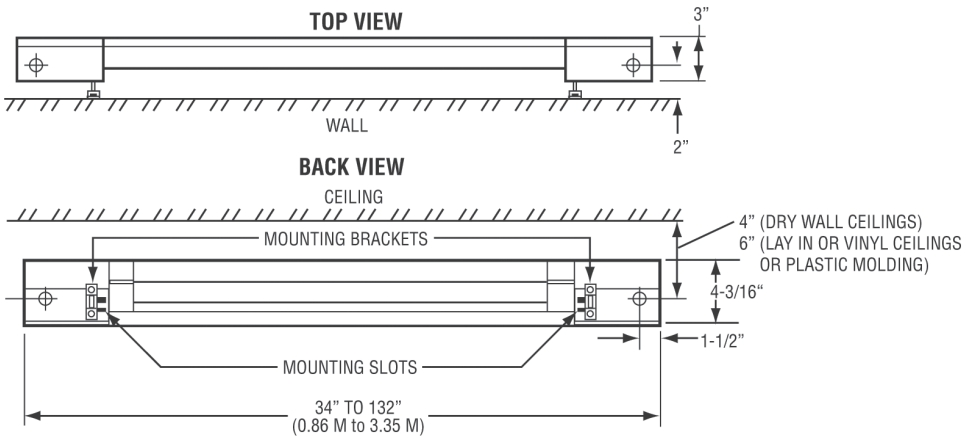

INVIZATHERM SERIES

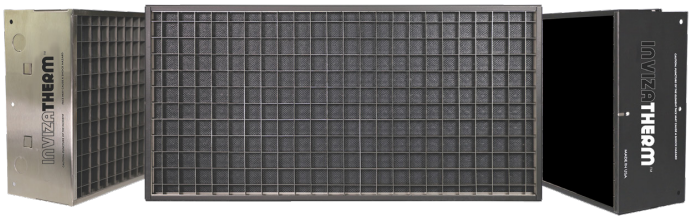

c UL us

Applications:

- Warehouses
- Factories
- Manufacturing Plants
- Storage Facilities
- Workshops and Garages
- Autobody and Repair Shops
- Fitness Studios
- Hot Yoga

Black Stainless Steel

Standard color - add BK for black satin finish to the end of the catalog number.
Optional color - SS for stainless steel to the end of catalog number.
Optional Grid Diffuser - add code G to end of catalog number.

Standard Construction Features:

- NO MOVING PARTS - Nothing to break or wear out means the Invizatherm™ is maintenance free.
- NO ORANGE GLOW - Never worry about the eyesore of a glowing heater again. Every Invizatherm™ has a clean, black face which does not give off any light, meaning it neatly blends into the background.
- USING LOWER WAVELENGTHS - to radiate heat, Invizatherm heaters generate long wavelength heat, which are the most consistent, even, and energy efficient in the industry.
- NO REFLECTORS TO CLEAN - No bulbs means no need for reflectors. Another reason Invizatherm™ heaters require zero maintenance.
- NO BULBS - Save yourself money and frustration by never having to replace a bulb.
- MOUNTING - Wall mounting bracket is included with each heater.

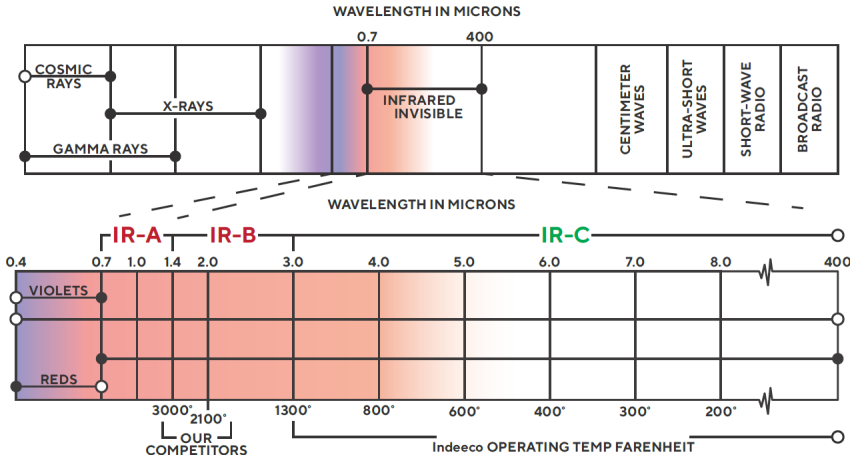

INDEECO

INVIZATHERM SERIES

12" Model	Single Phase			
Model	Watts	120V	208V	240V
STS-U12-0871B	871	7.3	-	-
STS-U12-1081B	1081	9.0	-	-
STS-U12-1111B	1111	9.3	-	-
STS-U12-1681B	1681	14.0	-	-
STS-U12-1436J	1077/1436	-	5.2	6.0

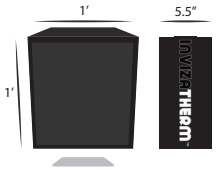

Shipping Weight 10 lbs.

24" Model	Single Phase						Three Phase	
Model	Watts	120V	208V	240V	277V	347V	208V	240V
STS-U24-1015V	762/1015	-	-	4.2	-	-	-	-
STS-U24-1316B	1316	11.0	-	-	-	-	-	-
STS-U24-1297V	974/1297	-	-	5.4	-	-	-	-
STS-U24-1659B	1659	13.8	-	-	-	-	-	-
STS-U24-1701V	1276/1701	-	6.1	7.1	-	-	-	-
STS-U24-2192B	2192	18.3	-	-	-	-	-	-
STS-U24-2001V	1501/2001	-	7.2	8.3	-	-	-	-
STS-U24-1982N	1982	-	-	-	7.2	-	-	-
STS-U24-2060I	2060	-	-	-	-	6.0	-	-
STS-U24-2222B	2222	18.5	-	-	-	-	-	-
STS-U24-2428V	1821/2428	-	8.8	10.1	-	-	-	-
STS-U24-2388N	2388	-	-	-	8.6	-	-	-
STS-U24-2488I	2488	-	-	-	-	7.2	-	-
STS-U24-3363B	3363	28.0	-	-	-	-	-	-
STS-U24-3239V	2429/3239	-	11.7	13.5	-	-	-	-
STS-U24-3008N	3008	-	-	-	10.9	-	-	-
STS-U24-3176I	3176	-	-	-	-	9.2	-	-
STS-U24-1992P	1496/1992	-	-	-	-	-	4.2	4.8
STS-U24-2442P	1834/2442	-	-	-	-	-	5.1	5.9
STS-U24-3041P	2284/3041	-	-	-	-	-	6.3	7.3

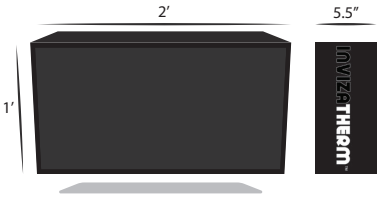

Shipping Weight 20 lbs.

48" Model	Single Phase							Three Phase				
Model	Watts	208V	240V	277V	347V	480V	600V	208V	240V	347V	480V	600V
STS-U48-2030V	1523/2030	7.3	8.5	-	-	-	-	-	-	-	-	-
STS-U48-2014I	2014	-	-	-	5.8	-	-	-	-	-	-	-
STS-U48-2030T	2030	-	-	-	-	4.2	-	-	-	-	-	-
STS-U48-2594V	1946/2594	9.4	10.8	-	-	-	-	-	-	-	-	-
STS-U48-2502I	2502	-	-	-	7.2	-	-	-	-	-	-	-
STS-U48-2594T	2594	-	-	-	-	5.4	-	-	-	-	-	-
STS-U48-3402V	2552/3402	12.3	14.2	-	-	-	-	-	-	-	-	-
STS-U48-3206I	3206	-	-	-	9.2	-	-	-	-	-	-	-
STS-U48-3402T	3402	-	-	-	-	7.1	-	-	-	-	-	-
STS-U48-4002V	3002/4002	14.5	16.7	-	-	-	-	-	-	-	-	-
STS-U48-3964N	3964	-	-	14.3	-	-	-	-	-	-	-	-
STS-U48-4120I	4120	-	-	-	11.9	-	-	-	-	-	-	-
STS-U48-4002T	4002	-	-	-	-	8.3	-	-	-	-	-	-
STS-U48-4042Y	4042	-	-	-	-	-	6.7	-	-	-	-	-
STS-U48-4856V	3642/4856	17.5	20.2	-	-	-	-	-	-	-	-	-
STS-U48-4776N	4776	-	-	17.2	-	-	-	-	-	-	-	-
STS-U48-4976I	4976	-	-	-	14.4	-	-	-	-	-	-	-
STS-U48-4856T	4856	-	-	-	-	10.1	-	-	-	-	-	-
STS-U48-4878Y	4878	-	-	-	-	-	8.1	-	9.6	-	-	-
STS-U48-6478V	4859/6478	23.4	27.0	-	-	-	-	-	-	-	4.9	-
STS-U48-6056N	6056	-	-	21.7	-	-	-	-	11.6	-	-	-
STS-U48-6352I	6352	-	-	-	18.3	-	-	-	-	-	5.8	-
STS-U48-6478T	6478	-	-	-	-	13.5	-	-	14.8	-	-	-
STS-U48-6118Y	6118	-	-	-	-	-	10.2	-	-	-	7.3	-
STS-U48-3971P	2983/3971	-	-	-	-	-	-	8.3	9.6	-	-	-
STS-U48-3928U	3928	-	-	-	-	-	-	-	-	-	4.7	-
STS-U48-3963Z	3963	-	-	-	-	-	-	-	-	-	-	3.8
STS-U48-4794P	3601/4794	-	-	-	-	-	-	10.0	11.5	-	-	-
STS-U48-4838U	4838	-	-	-	-	-	-	-	-	-	5.8	-
STS-U48-4797Z	4797	-	-	-	-	-	-	-	-	-	-	4.6
STS-U48-5954P	4472/5954	-	-	-	-	-	-	12.4	14.3	-	-	-
STS-U48-6060U	6060	-	-	-	-	-	-	-	-	-	7.3	-
STS-U48-5982Z	5982	-	-	-	-	-	-	-	-	-	-	5.8



Shipping Weight 38 lbs.

INVIZATHERM THIN SERIES



Applications:

- Restaurants
- Outdoor Patios
- Parking Garages
- Indoor Pools
- Hotel Entrances and Valet Stands
- Stadiums and Arenas
- Car Rental Stations
- Water and other Treatment Facilities

Black Stainless Steel

Standard color - add BK for black satin finish to the end of the catalog number.
Optional color - SS for stainless steel to the end of catalog number.

Standard Construction Features:

- NO MOVING PARTS - Nothing to break or wear out means the Invizatherm™ is maintenance free.
- NO ORANGE GLOW - Never worry about the eyesore of a glowing heater again. Every Invizatherm™ has a clean, black face which does not give off any light, meaning it neatly blends into the background.
- USING LOWER WAVELENGTHS - to radiate heat, Invizatherm heaters generate long wavelength heat, which are the most consistent, even, and energy efficient in the industry.
- NO REFLECTORS TO CLEAN - No bulbs means no need for reflectors. Another reason Invizatherm™ heaters require zero maintenance.
- NO BULBS - Save yourself money and frustration by never having to replace a bulb.
- MOUNTING - Wall mounting bracket is included with each heater.

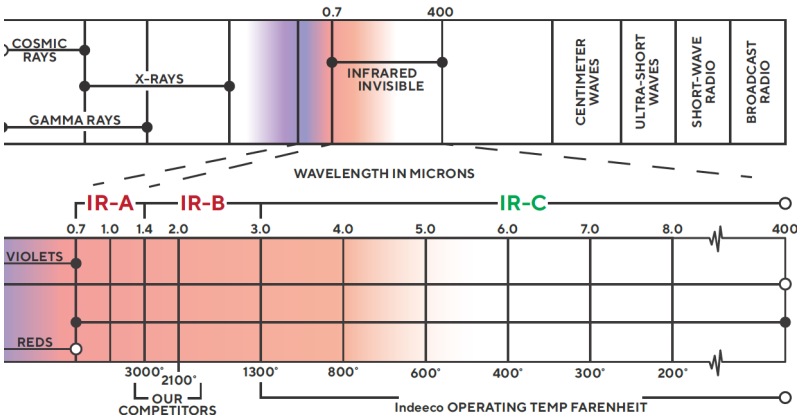

INVIZATHERM THIN SERIES

Invizatherm™ Thin is available with an 18” or 36” heating surface. The heating element is a flat panel IR emitter, which is able to be “cycled” for increased energy efficiency. All Invizatherm™ Thin heaters are UL rated for outdoor use under cover, and come supplied with a rear mounted junction box. The mounting bracket, included, is designed for ceiling or wall mounted locations, and is predesigned for pivoting to safely hang at an angle.

18” Model		Single Phase
Model	Watts	120V
STT-U18-1091B	1091	9.1
STT-U18-1330B	1330	11.1
STT-U18-1767B	1767	14.8
STT-U18-2161B	2161	18.0

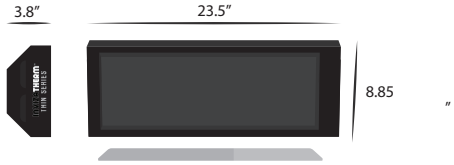

Shipping Weight 16 lbs.

36” Model			Single Phase
Model	Watts	208V	240V
STT-U36-2180V	1635 /2180	7.9	9.1
STT-U36-2660V	2071 /2660	9.6	11.5
STT-U36-3104V	2328 /3104	11.2	12.9
STT-U36-3534V	2661 /3534	12.8	14.8
STT-U36-4322V	3242 /4322	15.6	18.1

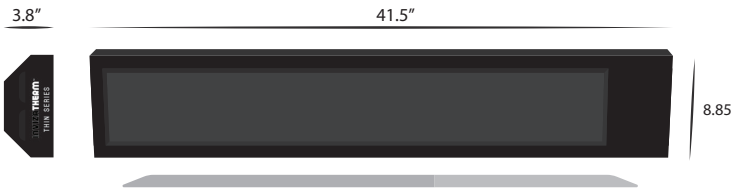

Shipping Weight 21 lbs.

INVIZATHERM SERIES

How to determine the number of heaters you will need

1. You will need to find the approximate square footage of the area you wish to heat.

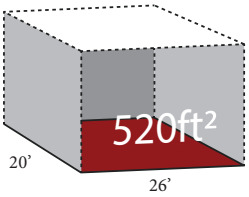

2. Now that you know how large your space is, use this watts per square foot chart and reference the desired temperature rise. This will help determine the KW that is required to heat your space.

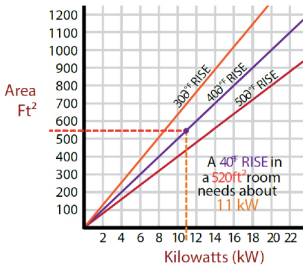

3. After determining the total kW needed for your space, visit the product portion of this catalog to select appropriately sized heaters for your space; keeping in mind voltage, phase, and wattage suitable for your needs. When determining the heater model and quantity that you need for your space, note that both Invizatherm™ and Invizatherm™ Thin can be ceiling or wall mounted. To achieve even heat distribution, we recommend smaller, more evenly spaced heaters throughout your space.

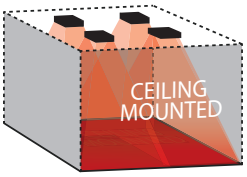

4. If heat control is needed for your area, reference the controls section of this catalog to determine what the best method of heat control is for your area. Note that not all heating control options mentioned in this catalog are suitable for every heater.

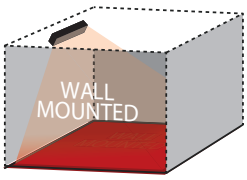

**For more information on heater requirements or controls, contact your local distributor or call Indeeco directly to speak with a comfort heat professional.*

INVIZATHERM CONTACTOR PANELS



Indeeco's Contactor Panels are a simple and effective method of controlling your Invizatherm™ and Invizatherm Thin™ heater. Contactor Panels are suitable for all heater models, configurations, and voltages. Each Contactor Panel model is designed to allow for field designation of one or multiple zones, offering complete customization when controlling heaters indivually or in groups. Each 30A or 60A contactor is able to carry one or several heaters. These contactor panels are often partnered with thermostats (simple and smart), but may also be controlled with on/off switches, timers, and other low voltage controllers. Indeeco's contactor panels are factory wired for quick and efficient installations and offer an affordable solution for every project.

- Nema Type 1 and Type 4/12 enclosure available, cULus listed and labeled contactor panel.
- 24V and 120V Control Voltage available.
- Suitable for smart or standard wall thermostats.
- Single phase panels available with 30A contactors in 2, 5, 10 or 20 unit designs. Supply voltage from 120-600V.
- Three phase panels available with 30A or 60A contactors in 2, 5, 10 or 20 unit designs. Supply voltage from 208-600V.
- All contactors rated up to 600V.
- Single and multi-zone control capability.
- Nothing to program, all the intelligence is in the thermostat.

Model Number	Item Description	Supply Voltage	Control Voltage	Phase
THZ-S30-2C-0	Invizatherm Contactor Panel - Variable Zone, 2 Contactors (30A/ea)	120-600	24VAC	1
THZ-S30-2C-1	Invizatherm Contactor Panel - Variable Zone, 2 Contactors (30A/ea)	120-600	120V	1
THZ-T30-2C-0	Invizatherm Contactor Panel - Variable Zone, 2 Contactors (30A/ea)	120-600	24VAC	3
THZ-T30-2C-1	Invizatherm Contactor Panel - Variable Zone, 2 Contactors (30A/ea)	120-600	120V	3
THZ-S30-5C-0	Invizatherm Contactor Panel - Variable Zone, 5 Contactors (30A/ea)	120-600	24VAC	1
THZ-S30-5C-1	Invizatherm Contactor Panel - Variable Zone, 5 Contactors (30A/ea)	120-600	120V	1
THZ-T30-5C-0	Invizatherm Contactor Panel - Variable Zone, 5 Contactors (30A/ea)	208-600	24VAC	3
THZ-T30-5C-1	Invizatherm Contactor Panel - Variable Zone, 5 Contactors (30A/ea)	208-600	120V	3
THZ-T60-5C-0	Invizatherm Contactor Panel - Variable Zone, 5 Contactors (30A/ea)	208-600	24VAC	3
THZ-T60-5C-1	Invizatherm Contactor Panel - Variable Zone, 5 Contactors (30A/ea)	208-600	120V	3
THZ-S30-10C-0	Invizatherm Contactor Panel - Variable Zone, 10 Contactors (30A/ea)	120-600	24VAC	1
THZ-S30-10C-1	Invizatherm Contactor Panel - Variable Zone, 10 Contactors (30A/ea)	120-600	120V	1
THZ-T30-10C-0	Invizatherm Contactor Panel - Variable Zone, 10 Contactors (30A/ea)	208-600	24VAC	3
THZ-T30-10C-1	Invizatherm Contactor Panel - Variable Zone, 10 Contactors (30A/ea)	208-600	120V	3
THZ-T60-10C-0	Invizatherm Contactor Panel - Variable Zone, 10 Contactors (30A/ea)	208-600	24VAC	3
THZ-T60-10C-1	Invizatherm Contactor Panel - Variable Zone, 10 Contactors (30A/ea)	208-600	120V	3
THZ-S30-20C-0	Invizatherm Contactor Panel - Variable Zone, 20 Contactors (30A/ea)	120-600	24VAC	1
THZ-S30-20C-1	Invizatherm Contactor Panel - Variable Zone, 20 Contactors (30A/ea)	120-600	120V	1
THZ-T30-20C-0	Invizatherm Contactor Panel - Variable Zone, 20 Contactors (30A/ea)	208-600	24VAC	3
THZ-T30-20C-1	Invizatherm Contactor Panel - Variable Zone, 20 Contactors (30A/ea)	208-600	120V	3
THZ-T60-20C-0	Invizatherm Contactor Panel - Variable Zone, 20 Contactors (30A/ea)	208-600	24VAC	3
THZ-T60-20C-1	Invizatherm Contactor Panel - Variable Zone, 20 Contactors (30A/ea)	208-600	120V	3

INVIZATHERM CONTROLS

All Invizatherm™ and Invizatherm™ Thin heater models are capable of being regulated or "cycled" to control their heat output. Different methods of control offer varying levels of efficiency so each application should be examined to determine which control method is most suitable. The following pages discuss the Indeeco recommended methods of control in more detail, highlighting the benefits and function of each.

Invizatherm™ and Invizatherm™ Thin heaters do not come with built in controls. The heaters may be installed and operated without controls, in which case a heater is either 100% on, or it is 100% off. This may be acceptable in many applications; however, when controls are needed to regulate temperature or follow a heating schedule, Indeeco offers a variety of manufacturer recommended control options which range from single unit control, all the way to full system commercial and industrial grade control panels. Please contact your Invizatherm™ supplier or a qualified electrician to determine if controls are needed for your heating application.

Control Panel

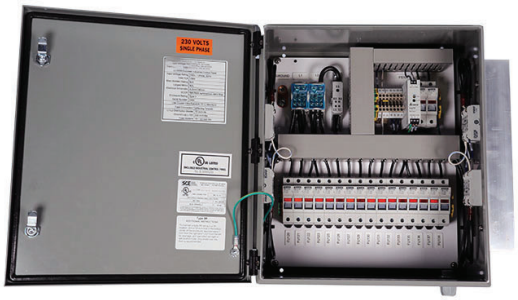

Indeeco offers a variety of UL listed control panels as the most efficient and effective way to control your Invizatherm™ and Invizatherm Thin™ heaters. Suitable for 120V/240V and 480V heaters in both single and three phase design. Standard panels are equipped to handle up to 4 independently controlled heat zones. See below for a list of standard Indeeco control panel options.

Contact you local sales representative for assistance in sizing your panel.
We will need the following information to size your panel:

- Number of heating zones
- Which model number and the quantity of each heater per zone
- Voltage/phase
- How do you want to control the heaters (built-in or remote color touch screen (specify), line voltage potentiometer on the panel door, or remote low voltage thermostat)

Touch Screen



Indeeco's remote mounted Touch Screen allows users to access control of the heaters at a convenient location. A 4" color screen allows access to each zone for independent temperature control. All Indeeco remote mounted touch screens are rated for indoor or outdoor use.

INVIZATHERM CONTROLS

Percent Timer



This 120V/240V 20 Amp Percent Timer offers simple control utilizing Indeeco's preferred method of "cycling" to regulate heater output. The simple operation of this Percentage Timer makes this unit ideal for regulating your Invizatherm™ and Invizatherm™ Thin heaters. Two dials give the user complete control of the heat output; one controls the cycle time of the heater, and the other controls the amount of time in which the heater is on during that given cycle. For example, if the cycle time is set to 1 minute, and the percent set to 75%; then the heater will be on for 45 seconds, off for 15 seconds, then repeat. This allows precise temperature control while offering optimal heater efficiency. This method of heat control is ideal for areas that need to regulate a consistent temperature.

Timer



This 120V/240V 20 Amp In-Wall Timer gives the user precise control over the length of time a heater is on. Simply turn the dial to the desired time and it will be on for this period. At the end of this set time period, the heater will automatically shut off. This method of control is ideal for areas that are used frequently, but not for extended periods of time.

LOCAL CONTROLS		RATING		
Model	**Item Description**	**AMP**	**Volt**	**Phase**
TZ-PCT	Percent Timer	20	120/240	1
TZ-TIMER	Heavy Duty Timer	28	120/240	1
TZ-TIMER-2HR	Heavy Duty 2-hr Timer	28	120/240	1





Indeeco offers a variety of cULus listed control panels as the most efficient and effective way to control your Invizatherm™ and Invizatherm™ Thin heaters. Suitable for 120V, 208/ 240V, and 480V heaters in both single and three phase design. Standard panels are equipped to handle up to 4 independently controlled heat zones and include a safety disconnect. Control options include a programmable color touch screen, potentiometer, as well as other low voltage control options. Custom panel designs are available.

**Contact an Indeeco Sales Representative for Control Panel model numbers and pricing.*

THERMOSTATS
Line Voltage






	MS26	MD26	M601W	M602W	M601TPW	M602TPW	M611W	612W
Action	Snap Action		Snap Action		Snap Action		Snap Action	
Type	SPST	DPST	SPST	DPST	SPST	DPST	SPST	DPST
Watt Rating	Model MD26 has Positive OFF		Model M602W has Positive OFF		Model M602TPW has Positive OFF		Model M612W has Positive OFF	
120v	22A		22A		22A		22A	
208v	22A		22A		22A		22A	
240v	22A		22A		22A		22A	
277v	18A		18A		18A		18A	
Pilot Duty	No		Yes 125VA		Yes 125VA		Yes 125VA	
Temp. Range (°F)	50°F to 80°F		45°F to 75°F		45°F to 75°F		45°F to 75°F	
Differential	+/- 5°F		+/- 4°F		+/- 4°F		+/- 2 1/2°F	
Features	These economy thermostats are the snap action type that are used in apartment construction. Good thermostat for its value. Ideal for radiant cove heaters and baseboard.		These bi-metal snap-action thermostats are sensitive. Large knob allow for easy adjustment.		Same as M601W and M602W except the cover mounting cover offer tamper-proof feature.		Built-in heat anticipator assures closer control of room temperature.	





	M600MTP	M600S	T100	T200
Action	Modulation (2-stage)	Simultaneous switching (double ckt)	Snap Action with Heat Anticipator	
Type	DPST		SPST	DPST
Watt Rating				
120v	22A	22A	22A	
208v	22A	22A	22A	
240v	22A	22A	22A	
277v	18A	18A	18A	
Pilot Duty	Yes 125VA	Yes 125VA	Yes 125VA	
Temp. Range (°F)	45°F to 75°F	50°F to 80°F	50°F to 90°F	
Differential	Accuracy: Within 3°F of setpoint	Accuracy: Within 3°F of setpoint	+/- 2 1/2°F	
Features	One thermostat controls two separate heating circuits and reduces input during light load periods. Second stage activates when temperature drops to approx. 1-1/2ºF below the first stage turn-ON temperature.	Simultaneous control of two heating loads. Used where the total load slightly exceeds capacity of a single switch, where two thermostats are impractical. Both switches are calibrated to operate at approx. the same temperature.	Line voltage thermostat with everything; Performance, reliability, durability, and a large knob. Built-in heat anticipation assures close temperature regulation. Large knob for easy rotation.	

THERMOSTATS

Electronic Digital Line Voltage






	TH108PLUSA	TH114A240DBA	TH106A	TL8230A1003/U
Action	Triac: Silent Operation	Electronic Switch	Triac: Silent Operation	Microprocessor
Type	12.5A Resistive 2-wire SPST	15 A Resistive 4-wire DPST	16.7A Resistive 2-wire SPST	16.7 A Resistive 4-wire DPST
Watt Rating	Minimum: 2-amp load	No minimum load	Minimum: 2-amp load	No minimum load
120v	n/a	n/a	2000 watts	n/a
208v	n/a	n/a	n/a	3120 watts
240v	3000 watts	3600 watts	4000 watts	3600 watts
277v	n/a	n/a	n/a	n/a
Pilot Duty	No	No	No	No
Temp. Range (°F)	40°F to 85°F	40°F to 85°F	40°F to 85°F	40°F to 85°F
Differential	Accuracy: Within +/- 0.27°F	Accuracy: Within 1°F of setpoint	Accuracy: Within +/- 0.27°F	Accuracy: Within 1°F of setpoint
Features	Digital, non-programmable 12.5amp model delivers exceptional accuracy. Ideal for radiant ceiling panels and baseboard. Not for fan-forced heaters.	Digital, non-programmable model delivers exceptional accuracy. Ideal for radiant ceiling panels and baseboard. Can be used for fan-forced heaters.	Digital, programmable high capacity model delivers exceptional accuracy. Ideal for radiant ceiling panels and baseboard. Can be used for fan-forced heaters and resistive loads.	Digital, programmable model delivers exceptional accuracy. Ideal for radiant ceiling panels and baseboard. Can be used for fan-forced heaters.

Electronic Digital Low Voltage


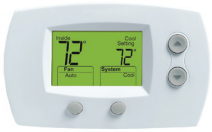


	CNTLTSTDNP1H1C	TH5220D1029	1006998
Action	Electronic Switch	Electronic Switch	Bimetal
Type	24V .015 -1.0A @ 30V 2-wire	24V .015 -1.0A @ 30V 5-wire	SPST
Watt Rating	-	-	-
120v	n/a	n/a	n/a
208v	n/a	n/a	n/a
240v	n/a	n/a	n/a
277v	n/a	n/a	n/a
Pilot Duty	24VAC	24VAC	30VA at 30V max
Temp. Range (°F)	40°F to 90°F	40°F to 90°F	50°F to 90°F
Differential	Accuracy: Within 1°F of setpoint	Accuracy: Within 1°F of set	Accuracy: +/-3°F of setpoint
Features	Digital, Non-Programmable 24V delivers exceptional accuracy. (Heat Only)	Digital, Non-Programmable, 24V 2-stage 5-7 wire heat and cool thermostat. One-touch temperature control with exceptional accuracy. Ideal for plenum heaters, and HVAC systems.	Single Stage, Slide Switch

CONTROLS
Specialty Controls









	WR80	JC80EP	WT11A	WT12A	LTR SERIES
Action	Snap Action Switch	Snap Action Switch	Positive snap action switch		Electronic Relays
Type	SPST	SPST	SPDT	DPST	Microprocessor base design
Watt Rating			NEMA 4X rated		These electronic relays have been designed for silent control of high voltage resistive loads from a low voltage control circuit. Inductive motor loads can also be controlled (120V to 240V only). Compatible with 24V thermostats. LTR1120: 120V; 22A LTR208240: 208V/240V; 22A LTR1277: 277V; 19A
120v	25A	22A	25A		
208v	22A	22A	25A		
240v	22A	22A	25A		
277v	18A	22A	22A		
Pilot Duty	Yes 125VA	Yes 125VA	Yes 125VA		
Temp. Range (°F)	20°F to 80°F	20°F to 80°F	40°F to 110°F	40°F to 100°F	
Differential	+/- 3°F	+/- 3.5°F	+/- 3°F		
Features	Rugged design for garages, factories, warehouses and similar commercial and industrial installations. The WR80 can control several heaters by using an external contractor.	This explosion proof room thermostat is suitable for Class 1, Group D and Class II, Groups E, F, and G locations.	Nema 4X weatherproof enclosure. The control has a SPDT output and can be used for heating or cooling (ventilation) Multi-positional mounting offers flexibility in new or existing installations.		The relays can be used with model LT186F01 electronic room sensor, providing proportional and integral control. Also can be tied to building management systems.







	LTR2240	TC1	M600THW	M600THB
Action	Dual Silent Relay	Enclosure protection for thermostats.	White thermostat cover with built-in thermometer. For M600 Series.	Beige thermostat cover with built-in thermometer. For M600 Series stats.
Type	(2) single pole switches	Material: Impact resistant polycarbonate. Clear. Dimensions are: 7" L x 4.28" H x 2.75" D		
Watt Rating	Resistive Inductive			
120v	N/A			
208v	25A 1HP, 8.8A	Thermostat enclosure kits are designed to protect the thermostat. Circulating slots allow airflow for proper operation. Guards are lockable and a key is provided to maintain security.	Minimum 50pcs. Allow 4 weeks.	
240v	25A 1HP, 8A			
277v	N/A			
Pilot Duty	Yes 125VA			
Temp. Range (°F)	20°F to 140°F			
Differential	+/- 1.5°F			
Features	This dual level temperature relay may be used to operate two separate heating loads by means of a single low voltage thermostat. Relay is mounted in an enclosure.			

HOW TO ORDER

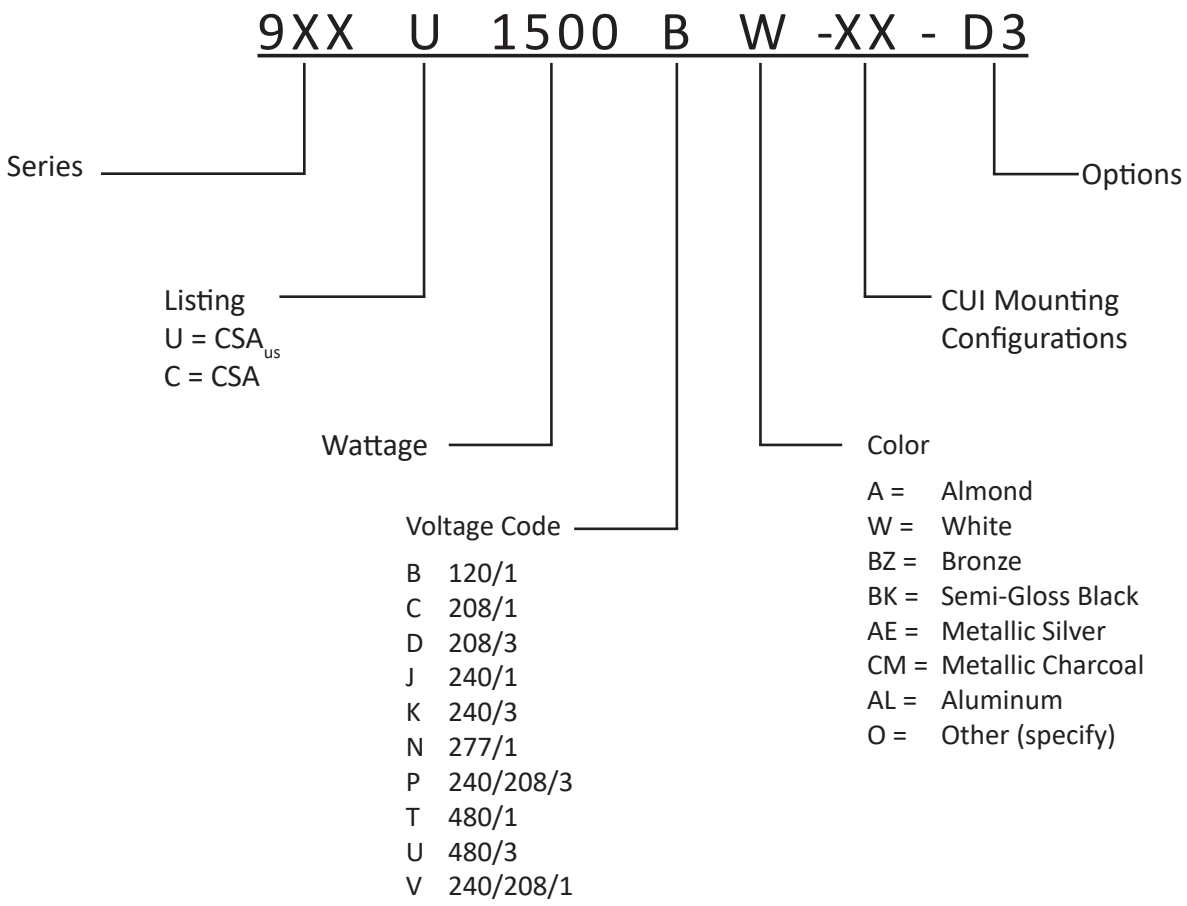

Model number vary by series. Reference the specification tables for a full list.

WARRANTY PERIOD

Indeeco Product Line	Warranty Period
BBI (903)	1 year* and 10 years on heating element
BISI/BII (905/907)	1 year* and 5 years on heating element
BCI (906)	1 year* and 5 years on heating element
BASI (908)	1 year* and 5 years on heating element
BAI/BAPI (909/911)	1 year* and 5 years on heating element
LBAI/LBAPI (912/913)	1 year* and 5 years on heating element
BMI (914)	1 year* and 5 years on heating element
BHI (916)	1 year* and 5 years on heating element
RCI (918)	1 year* and 5 years on heating element
CUI (922)	1 year* and 5 years on heating element
ULIR (925)	1 year* and 5 years on heating element
WRI (930)	1 year* and 5 years on heating element
CCI (931)	1 year* and 5 years on heating element
WCI (932)	1 year* and 5 years on heating element
WAI (933)	1 year* and 5 years on heating element
WLI (934)	1 year* and 1 year on heating element
CDI (937)	1 year* and 5 years on heating element
TSI (938)	1 year* and 5 years on heating element
FFI (939)	1 year* and 5 years on heating element
CLI (941)	1 year* and 5 years on heating element
WCZ (950)	1 year* and 1 year on heating element
All Other Product Lines	18 months from the date of shipment from Indeeco's factory, or 12 months from the date the product is first placed into service, whichever period lapses first.

LIMITED WARRANTY

Industrial Engineering and Equipment Company (Indeeco) new products are warranted against defects in workmanship, material, design, labeling and packaging. No other warranty, expressed or implied, written or oral, applies. No person other than an officer or the general manager of Indeeco is authorized to give any other warranty or assume any liability.

Warranty Period

Unless specified in the table above, the product warranty period is 18 months from the date of shipment from Indeeco's factory, or 12 months from the date the product is first placed into service, whichever period lapses first

Conditions of Warranty

Indeeco products must be installed, operated, and maintained in accordance with Indeeco's instructions. Indeeco is not liable for damage or unsatisfactory performance of the product resulting from accident, negligence, alteration, unauthorized repair, improper application or installation of the product, improper specifications, or corrosion. Indeeco IS NOT LIABLE FOR ANY INCIDENTAL OR CONSEQUENTIAL DAMAGES. Claims against carriers for damage in transit must be filed by the purchaser with the carrier.

Remedy

Contact ZIRCO at (403) 259-3303, for a Return Material Authorization Number (RMA#) and return instructions.

If after receipt of the product and the claim, Indeeco finds to its reasonable satisfaction that the product is defective in workmanship, material, design, labeling or packaging, the product will be repaired or replaced, or the purchase price refunded at Indeeco's option. There will be no charge to the purchaser for parts or labor. Removal and reinstallation of the product, and shipment of the product to Indeeco for repair or inspection, shall be at the purchaser's risk and expense.

THE REPAIR, REPLACEMENT, OR REFUND PROVIDED FOR IN THIS LIMITED WARRANTY IS THE EXCLUSIVE REMEDY OF THE PURCHASER. THIS WARRANTY IS EXPRESSLY IN LIEU OF ANY OTHER, INCLUDING ANY WARRANTY OF MERCHANTABILITY OR FITNESS FOR A PARTICULAR PURPOSE. THERE ARE NO WARRANTIES WHICH EXTEND BEYOND THE TERMS OF THIS LIMITED WARRANTY.

We have the experience and expertise to provide you with the personalized support to arrive at customized solutions.

Email sales@zirco.ca
or call (403) 259-3303
to find your nearest
Indeeco representative.

